MOUNT AIRY # 1 L.L.C.
PUBLIC WATER SUPPLY SYSTEM
PARADISE TOWNSHIP, MONROE COUNTY, PENNSYLVANIA

OWNER/APPLICANT:

MOUNT AIRY #1 L.L.C.
42 WOODLAND ROAD
MOUNT POCONO, PA 18344

CONTACT: ROBERT McNICHOLS SR.
(570) 947-9026

TOTAL PARCEL AREA = 888.91 ACRES

REVIEWING AGENCY

PA DEPARTMENT OF ENVIRONMENTAL PROTECTION
NORTHEAST REGION
2 PUBLIC SQUARE
WILKES-BARRE, PA 18711-0790
(570) 826-2511

INDEX OF SHEETS

W-1	WATER UTILITY PLAN
W-2	WATER UTILITY PLAN
W-3	WATER UTILITY PROFILE
W-4	WATER UTILITY PROFILE
W-5	WATER METER PIT AND DETAILS
W-6	WATER STORAGE TANK
W-7	
TO	CONSTRUCTION SPECIFICATIONS
W-X	

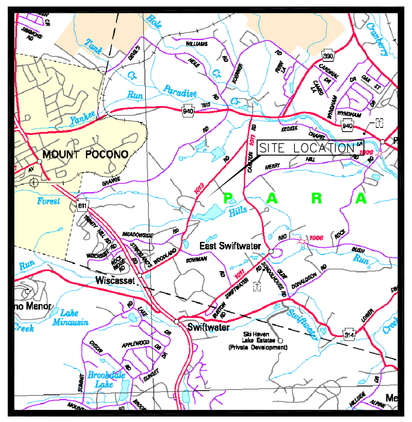

LOCATION MAP

MOUNT AIRY #1 LLC
WOODLAND ROAD (S.R. 1013)
PARADISE TOWNSHIP
MONROE COUNTY, PENNSYLVANIA

U.S. GEOLOGICAL SURVEY MAP
MOUNT POCONO, PA
SCALE: 1" = 2000'

LEGEND

- EXISTING 1 FOOT CONTOUR
- EXISTING 5 FOOT CONTOUR
- EXISTING FENCE
- EXISTING GUIDE RAIL
- EXISTING OVERHEAD ELECTRIC LINE
- EXISTING STORM LINE
- NEW WATER LINE
- NEW 2 FOOT CONTOUR

SYMBOLS

- NEW AIR RELEASE VALVE
- NEW FIRE HYDRANT
- NEW GATE VALVE

RECOMMENDED FOR APPROVAL BY:
PA DEPARTMENT OF ENVIRONMENTAL PROTECTION

_____ _____ Date

_____ _____ Date

_____ _____ Date

JAMES P. PALUMBO
REGISTRATION # 25630-E

PUBLIC WATER SUPPLY SYSTEM		
COVER SHEET		
MOUNT AIRY #1 L.L.C.	REVISIONS	DATE
LAND DEVELOPMENT	DESIGNED / DRAWN	
PARADISE TOWNSHIP, MONROE COUNTY	CHECKED JPC / SCALE	
PENNSYLVANIA	JOB NO. 8775.01 / DATE 08-23-05	
architects – engineers – environmental scientists		SHEET NO.
Quad3 group — 37 north washington street, wilkes-barre, pa. 18701 570-829-4200		INDEX

CADFILE:8775.01\CIVIL\8775_COVER.DWG

CHECK GRAPHIC SCALE BEFORE USING

SCALE IN FEET

100 0 100 200

JAMES P. PALUMBO
REGISTRATION # XXXXXXX

PUBLIC WATER SUPPLY SYSTEM

XXXXXXX

MOUNT AIRY #1 L.L.C.

LAND DEVELOPMENT

PARADISE TOWNSHIP, MONROE COUNTY

PENNSYLVANIA

REVISIONS	DATE

DESIGNED	DRAWN
JPC	DJM
CHECKED	SCALE
JPC	AS SHOWN
JOB NO.	DATE
8775.01	08-01-05

architects – engineers – environmental scientists

Quad3 group

37 north washington street, wilkes-barre, pa. 18701 570-829-4200

SHEET NO. C-1 of 2

CADFILE: 8775.01\CIVIL\8775SITE.DWG

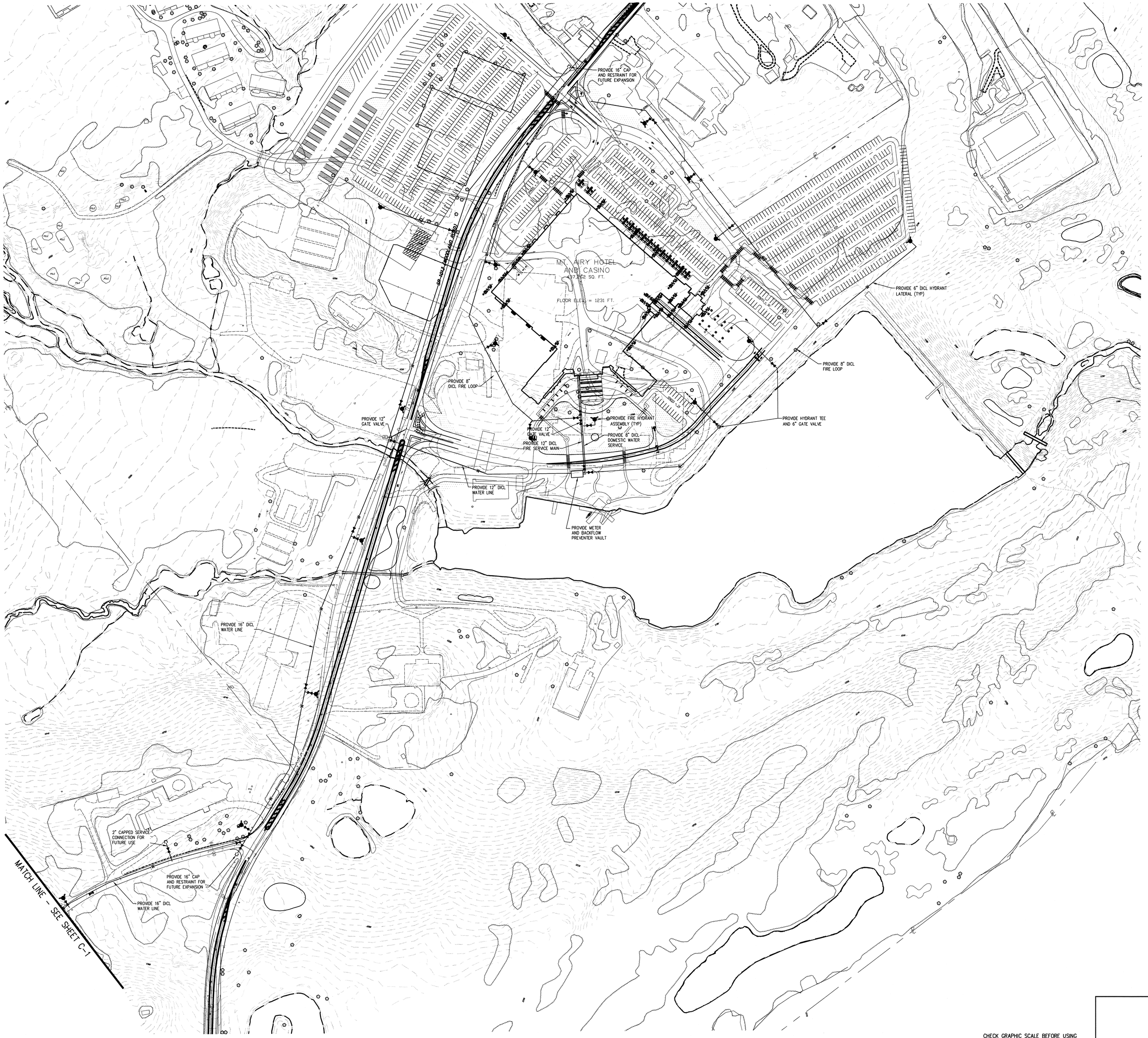

CHECK GRAPHIC SCALE BEFORE USING

SCALE IN FEET

100 0 100 200

JAMES P. PALUMBO
REGISTRATION # XXXXXXX

PUBLIC WATER SUPPLY SYSTEM

XXXXXXX

MOUNT AIRY #1 L.L.C.

LAND DEVELOPMENT

PARADISE TOWNSHIP, MONROE COUNTY

PENNSYLVANIA

REVISIONS	DATE

DESIGNED	DRAWN
JPC	DJM
CHECKED	SCALE
JPC	AS SHOWN
JOB NO.	DATE
8775.01	08-01-05

architects – engineers – environmental scientists

Quad3 group

37 north washington street, wilkes-barre, pa. 18701 570-829-4200

SHEET NO. C-2 of 2

CADFILE: 8775.01\CIVIL\8775SITE.DWG

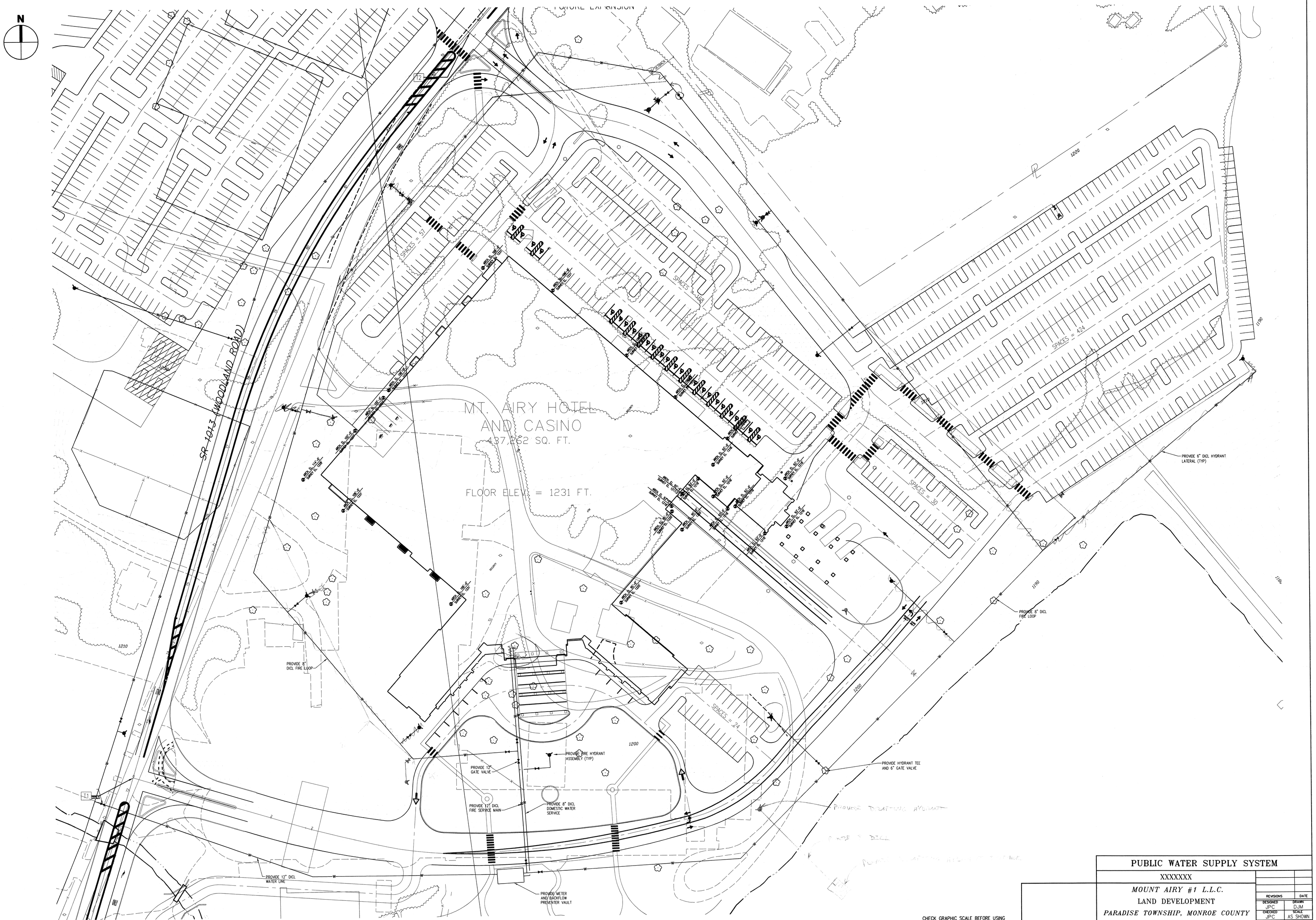

CHECK GRAPHIC SCALE BEFORE USING

SCALE IN FEET

40 0 40 80

JAMES P. PALUMBO
REGISTRATION # XXXXXXX

PUBLIC WATER SUPPLY SYSTEM

XXXXXXX

MOUNT AIRY #1 L.L.C.

LAND DEVELOPMENT

PARADISE TOWNSHIP, MONROE COUNTY

PENNSYLVANIA

REVISIONS	DATE

DESIGNED	DRAWN
JPC	DJM
CHECKED	SCALE
JPC	AS SHOWN
JOB NO.	DATE
8775.01	08-01-05

architects – engineers – environmental scientists

Quad3 group

37 north washington street, wilkes-barre, pa. 18701 570-829-4200

SHEET NO. C-3 of 2

CADFILE: 8775.01\CIVIL\8775C-3.DWG

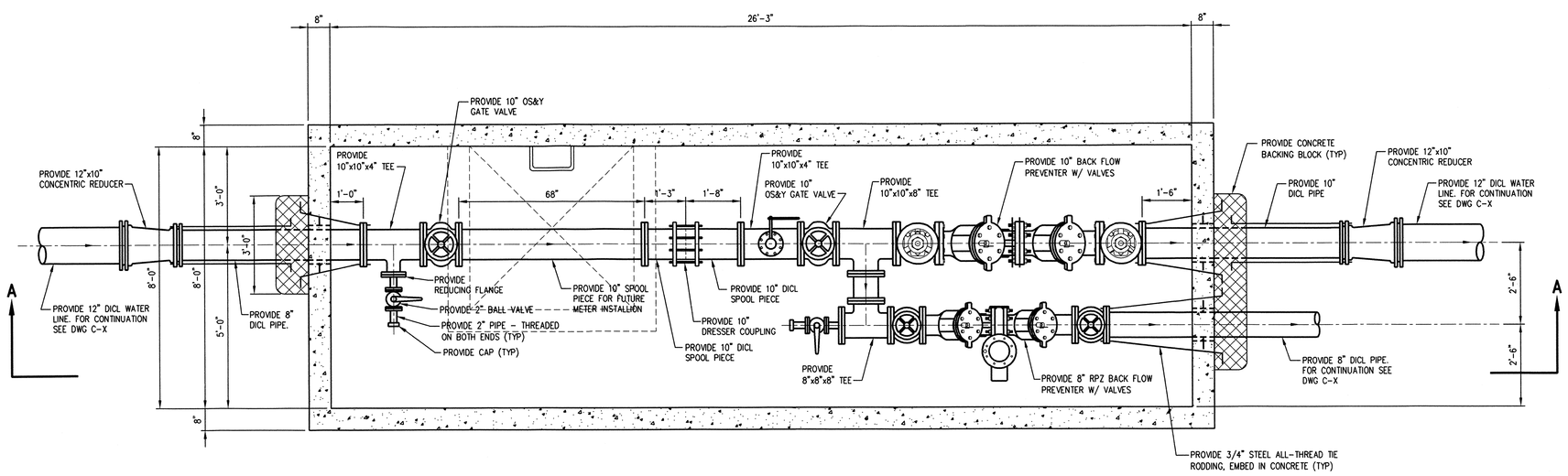

PLAN

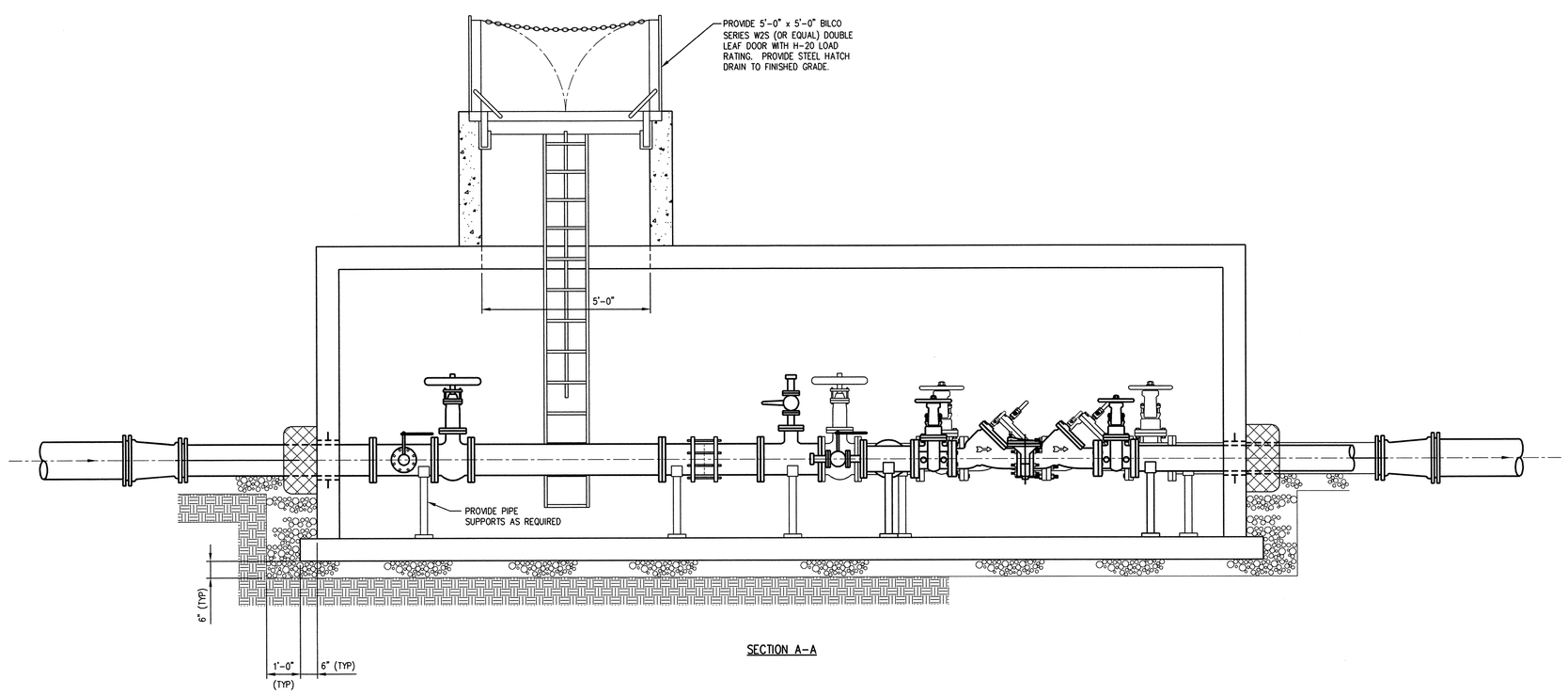

SECTION A-A

1 C-1 **METER PIT**
SCALE: 1/2"=1'-0"

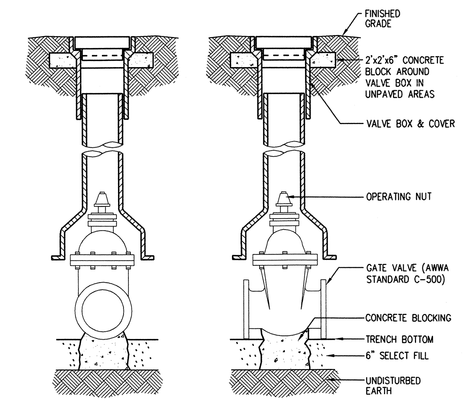

2 C-1 **VALVE AND VALVE BOX DETAIL**
SCALE: NONE

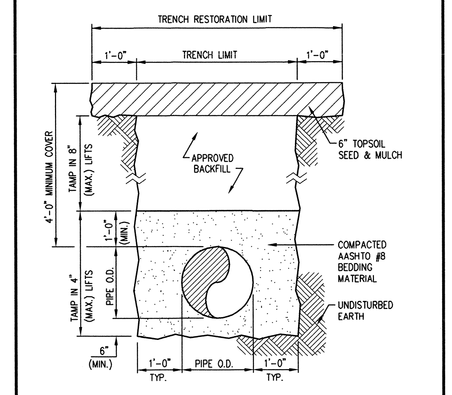

3 C-1 **TRENCH DETAIL - GRASS/UNPAVED AREA**
SCALE: NONE

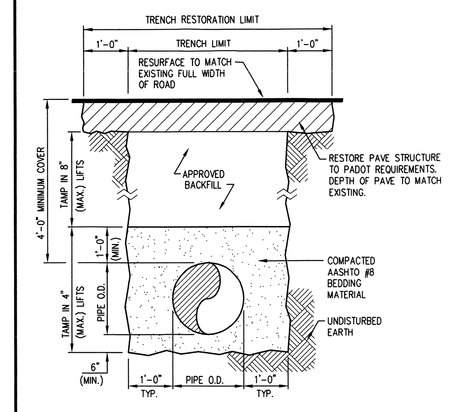

4 C-1 **TRENCH DETAIL IN ROAD R/W**
SCALE: NONE

HORIZONTAL REACTION BLOCKING SCHEDULE			
FITTING (SIZE & TYPE)	DIMENSIONS		
	A	B	C
4"-11 1/4° BEND	1'-0"	1'-6"	1'-0"
4"-22 1/2° BEND	1'-0"	1'-6"	1'-0"
4"-45° BEND	1'-0"	1'-6"	1'-0"
4"-90° BEND	1'-0"	1'-6"	1'-0"
4"-TEES/DEAD ENDS	1'-0"	1'-6"	1'-0"
6"-11 1/4° BEND	1'-0"	1'-6"	1'-0"
6"-22 1/2° BEND	1'-0"	1'-6"	1'-0"
6"-45° BEND	1'-0"	1'-6"	1'-0"
6"-90° BEND	1'-6"	1'-6"	1'-0"
6"-TEES/DEAD ENDS	1'-6"	1'-6"	1'-0"
8"-11 1/4° BEND	1'-0"	1'-8"	1'-6"
8"-22 1/2° BEND	1'-0"	1'-8"	1'-6"
8"-45° BEND	1'-6"	1'-8"	1'-6"
8"-90° BEND	2'-0"	1'-8"	1'-6"
8"-TEES/DEAD ENDS	2'-0"	1'-8"	1'-6"
10"-11 1/4° BEND	1'-0"	1'-10"	1'-6"
10"-22 1/2° BEND	1'-6"	1'-10"	1'-6"
10"-45° BEND	2'-0"	1'-10"	1'-6"
10"-90° BEND	3'-0"	1'-10"	1'-6"
10"-TEES/DEAD ENDS	2'-6"	1'-10"	1'-6"
12"-11 1/4° BEND	1'-0"	2'-0"	1'-6"
12"-22 1/2° BEND	1'-6"	2'-0"	1'-6"
12"-45° BEND	2'-6"	2'-0"	1'-6"
12"-90° BEND	3'-6"	2'-0"	1'-6"
12"-TEES/DEAD ENDS	3'-0"	2'-0"	1'-6"
14"-11 1/4° BEND	1'-6"	2'-2"	1'-6"
14"-22 1/2° BEND	2'-0"	2'-2"	1'-6"
14"-45° BEND	2'-6"	2'-2"	1'-6"
14"-90° BEND	4'-0"	2'-2"	1'-6"
14"-TEES/DEAD ENDS	3'-0"	2'-2"	1'-6"
16"-11 1/4° BEND	1'-6"	2'-4"	1'-6"
16"-22 1/2° BEND	2'-6"	2'-4"	1'-6"
16"-45° BEND	3'-0"	2'-4"	1'-6"
16"-90° BEND	4'-6"	2'-4"	1'-6"
16"-TEES/DEAD ENDS	3'-6"	2'-4"	1'-6"

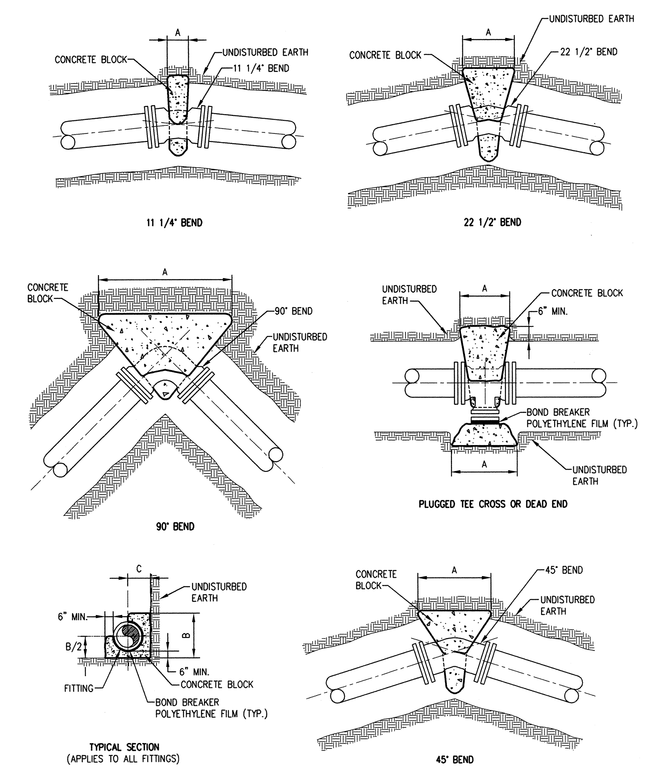

5 C-1 **TYPICAL CONCRETE REACTION BLOCK DETAILS**
SCALE: NONE

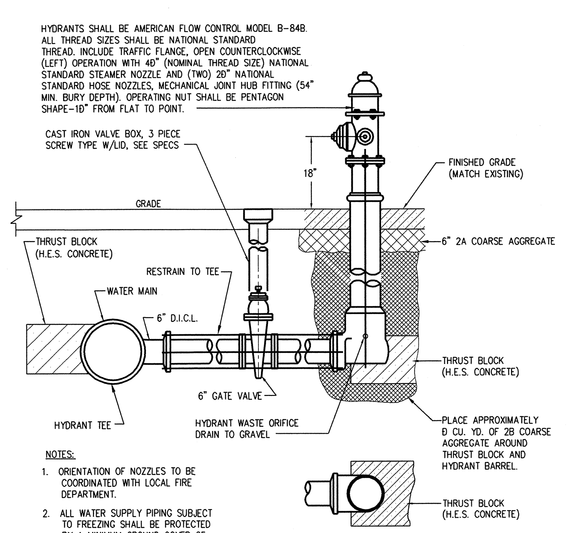

NOTES:

1. ORIENTATION OF NOZZLES TO BE COORDINATED WITH LOCAL FIRE DEPARTMENT.
2. ALL WATER SUPPLY PIPING SUBJECT TO FREEZING SHALL BE PROTECTED BY A MINIMUM GROUND COVER OF 4'-6" ABOVE THE TOP OF PIPE.
3. THE 6" VALVE SHALL BE PLACED AS NEAR TO THE MAIN AS POSSIBLE.

6 C-1 **FIRE HYDRANT ASSEMBLY**
SCALE: NONE

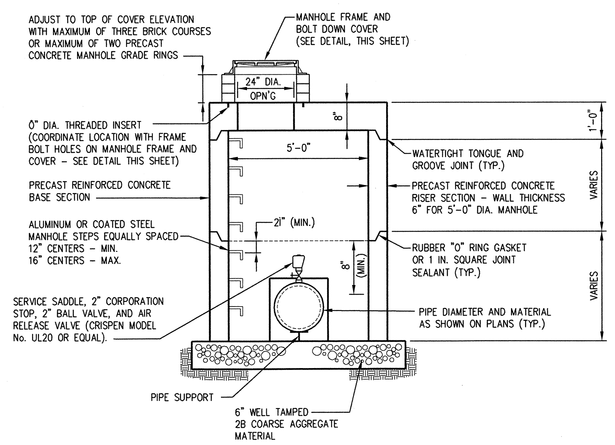

SECTIONAL ELEVATION

NOTE:

1. THE ABOVE DETAIL REPRESENTS THE AUTOMATIC-TYPE AIR RELEASE VALVE ASSEMBLY; THE MANUAL TYPE AIR RELEASE VALVE ASSEMBLY SHALL BE IDENTICAL LESS THE AUTOMATIC VALVE.

7 C-1 **MANUAL/AUTOMATIC AIR RELEASE VALVE AND MANHOLE ASSEMBLY**
SCALE: NONE

NOTES:

1. SILVER WELL NO. 3 TO BE EQUIPPED WITH A 7 1/2 HP, 3 STAGE STAINLESS STEEL SUBMERSIBLE PUMP SET AT A MINIMUM DEPTH OF 250 FEET BELOW GROUND SURFACE.
2. SILVER WELL NO. 4 TO BE EQUIPPED WITH A 7 1/2 HP, 3 STAGE STAINLESS STEEL SUBMERSIBLE PUMP SET AT A MINIMUM DEPTH OF 360 FEET BELOW GROUND SURFACE. SEE SPECIFICATIONS FOR PUMP CAPACITY.
3. END OF DIP TUBE IN EACH WELL SHALL BE SET AT ELEVATION 1150.0' OR 128.5' BELOW GROUND SURFACE.

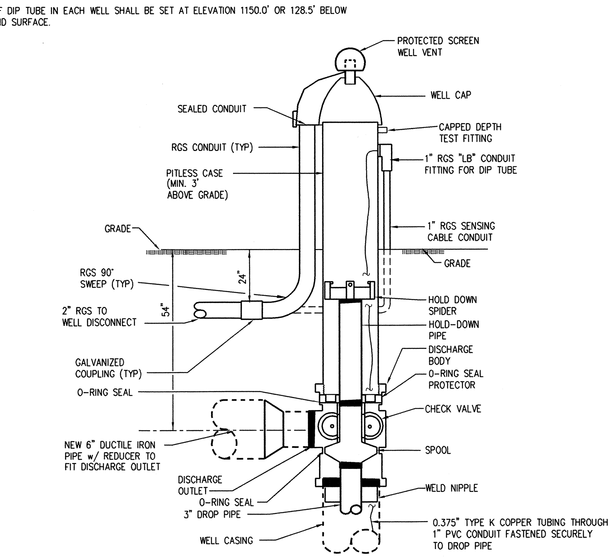

8 C-1 **PITLESS ADAPTER DETAIL**
SCALE: NONE

JAMES P. PALUMBO
REGISTRATION # XXXXXXX

PUBLIC WATER SUPPLY SYSTEM

WATER METER PIT AND DETAILS

MOUNT AIRY #1 L.L.C.

LAND DEVELOPMENT

PARADISE TOWNSHIP, MONROE COUNTY

PENNSYLVANIA

REVISIONS	DATE

DESIGNED	DRAWN
JPC	WDM
CHECKED	SCALE
JPC	AS NOTED
JOB NO.	DATE
8775.01	08-01-05

architects - engineers - environmental scientists

Quad3 group 37 north washington street, wilkes-barre, pa. 18701 570-829-4200

SHEET NO. C-1 of 1

CADFILE: 8775.01\CIVIL\8775C-1

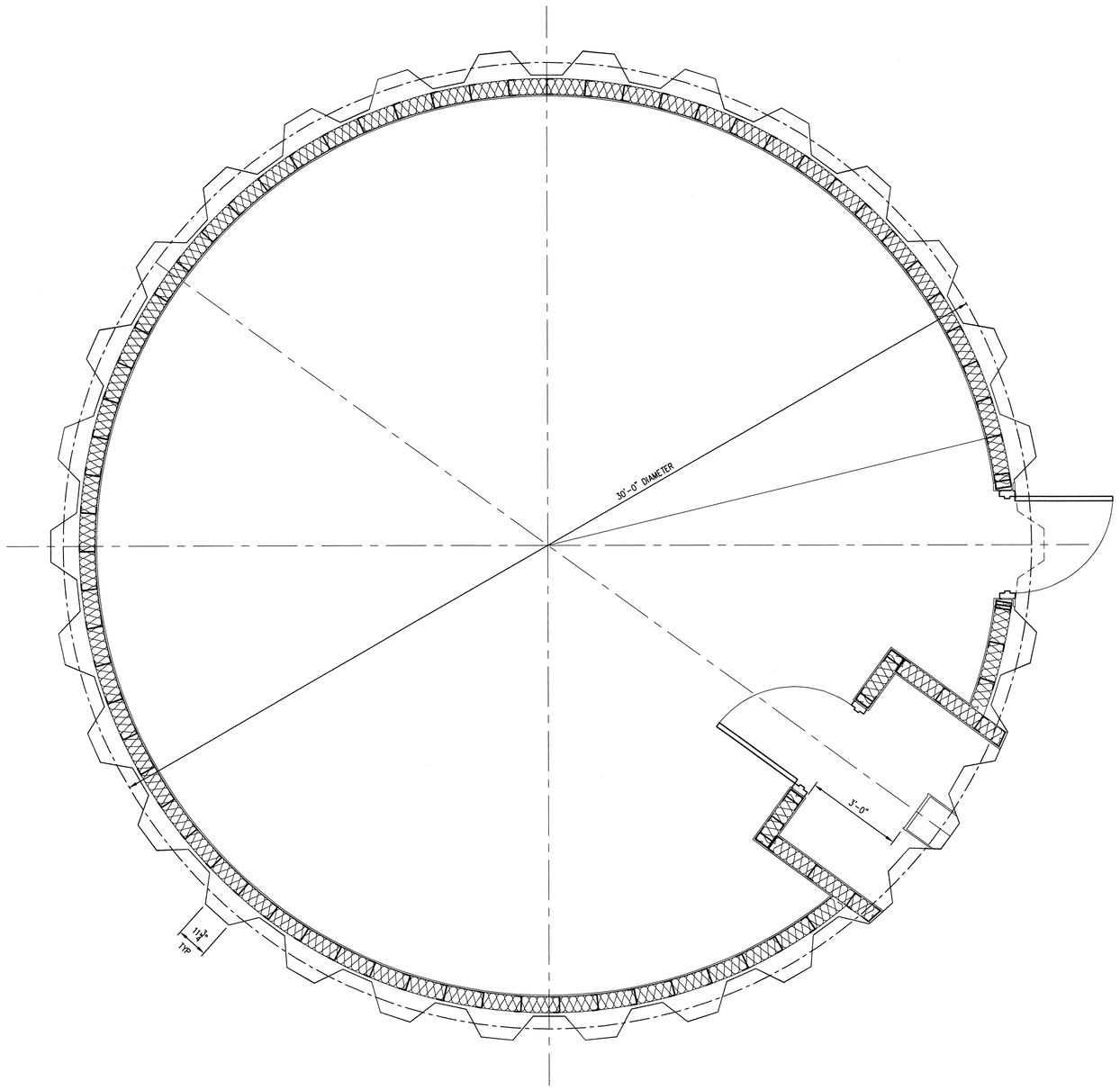

0 6" 1' 2' 3' 4' 5' 6'
SCALE: 1/2"=1'-0"

A MP-1 **WATER TOWER BASE FLOOR PLAN**
SCALE: 1/2"=1'-0"

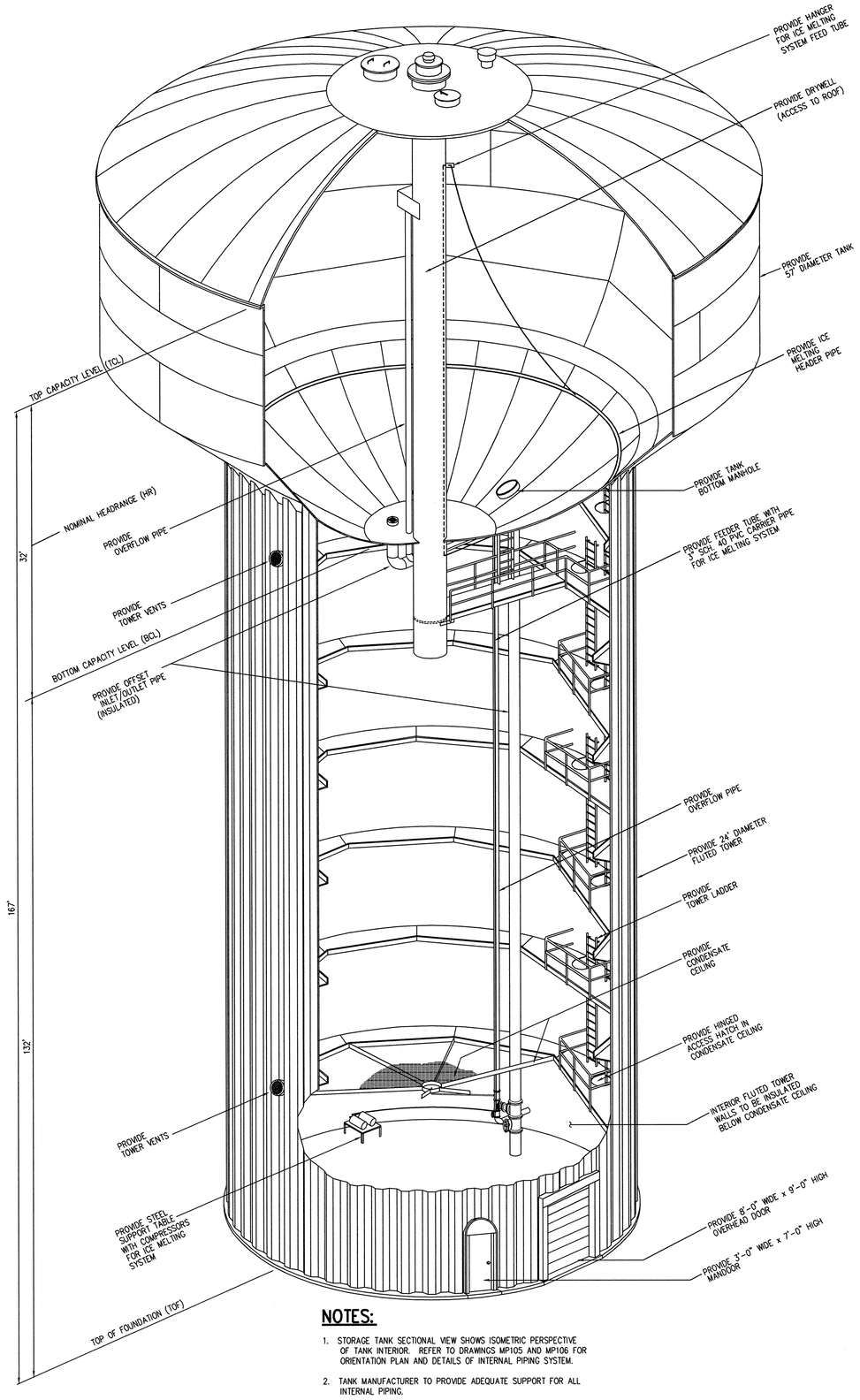

NOTES:

1. STORAGE TANK SECTIONAL VIEW SHOWS ISOMETRIC PERSPECTIVE OF TANK INTERIOR. REFER TO DRAWINGS MP105 AND MP106 FOR ORIENTATION PLAN AND DETAILS OF INTERNAL PIPING SYSTEM.
2. TANK MANUFACTURER TO PROVIDE ADEQUATE SUPPORT FOR ALL INTERNAL PIPING.

1 MP-1 **STORAGE TANK SECTION**
SCALE: NONE

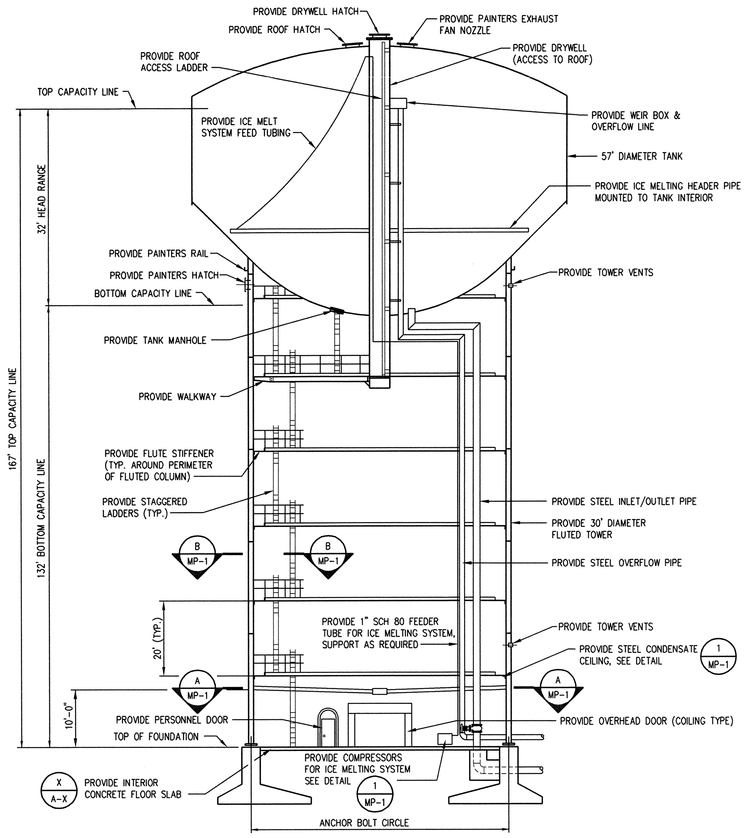

2 MP-1 **ELEVATION**
SCALE: NONE

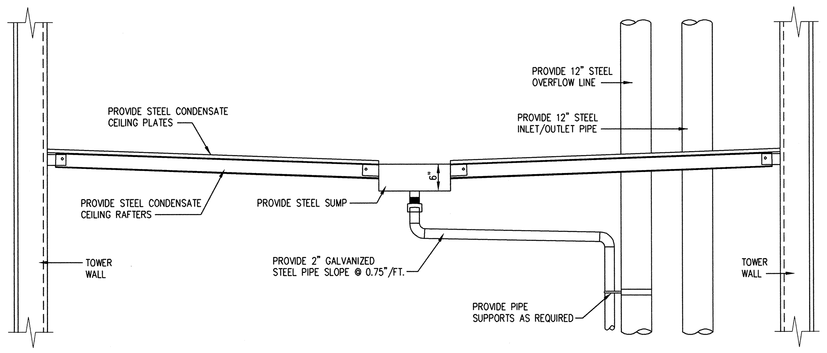

4 MP-1 **CONDENSATE CEILING DETAIL**
SCALE: NONE

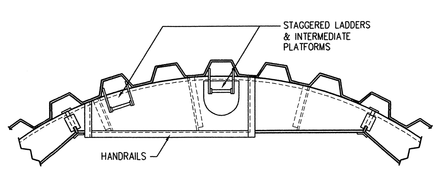

B MP-1 **TYPICAL FLUTE STIFFENER - SECTION**
SCALE: NONE

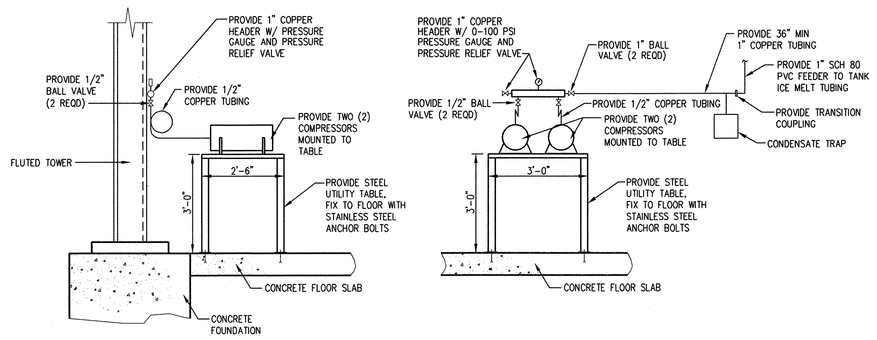

3 MP-1 **ICE MELTING SYSTEM COMPRESSOR DETAIL**
SCALE: NONE

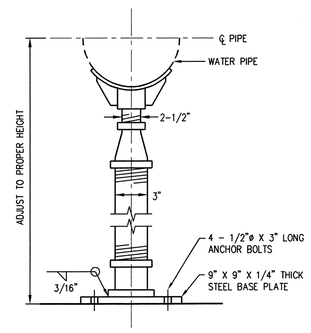

5 MP-1 **ADJUSTABLE PIPE SUPPORT DETAIL**
SCALE: NONE

JAMES P. PALUMBO
REGISTRATION # XXXXXXX

PUBLIC WATER SUPPLY SYSTEM	
WATER TOWER	
MOUNT AIRY #1 L.L.C.	REVISIONS / DATE
LAND DEVELOPMENT	DESIGNED JPC / DRAWN WDM
PARADISE TOWNSHIP, MONROE COUNTY	CHECKED JPC / SCALE AS NOTED
PENNSYLVANIA	JOB NO. 8775.01 / DATE 08-01-05
architects - engineers - environmental scientists	SHEET NO. MP-1 of 1
Quad3 group — 37 north washington street, wilkes-barre, pa. 18701 570-829-4200	

CADFILE: 8775.01\WWTR\8775MP-1

MOUNT AIRY # 1 L.L.C.
EXISTING SANITARY SEWAGE SYSTEM IMPROVMENTS
PARADISE TOWNSHIP, MONROE COUNTY, PENNSYLVANIA

OWNER/APPLICANT:

MOUNT AIRY #1 L.L.C.
42 WOODLAND ROAD
MOUNT POCONO, PA 18344

CONTACT: ROBERT McNICHOLS SR.
(570) 947-9026

TOTAL PARCEL AREA = 889.98 ACRES

REVIEWING AGENCY

PA DEPARTMENT OF ENVIRONMENTAL PROTECTION
NORTHEAST REGION
2 PUBLIC SQUARE
WILKES-BARRE, PA 18711-0790
(570) 826-2511

PARADISE TOWNSHIP PLANNING COMMISSION
RR1, BOX 1226
CRESCO, PA 18326
(570) 595-8840

PARADISE TOWNSHIP SUPERVISORS
RR1, BOX 1226
CRESCO, PA 18326
(570) 595-8840

INDEX OF SHEETS

SS-1 SANITARY SEWER PLAN AND PROFILE
SS-2 SANITARY SEWER PLAN AND PROFILE
SS-3 SANITARY SEWER PLAN AND PROFILE
SS-4 SANITARY SEWER DETAILS
SS-5 SEWAGE PUMP STATION
SS-6 SEWAGE PUMP STATION DETAILS

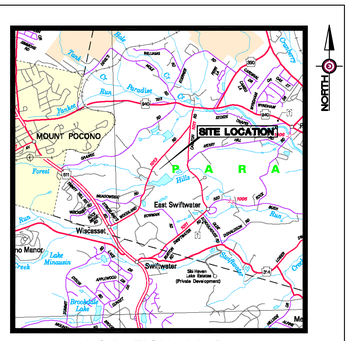

LOCATION MAP

MOUNT AIRY NO.1 LLC
WOODLAND ROAD (S.R. 1013)
PARADISE TOWNSHIP
MONROE COUNTY, PENNSYLVANIA

U.S. GEOLOGICAL SURVEY MAP
MOUNT POCONO, PA
SCALE: 1" = 2000'

RECOMMENDED FOR APPROVAL BY:
PA DEPARTMENT OF ENVIRONMENTAL PROTECTION

Date
Date
Date

RECOMMENDED FOR APPROVAL BY:
PARADISE TOWNSHIP PLANNING COMMISSION

Date
Date
Date
Date
Date

RECOMMENDED FOR APPROVAL BY:
PARADISE TOWNSHIP BOARD OF SUPERVISORS

Date
Date
Date

COMMONWEALTH OF PENNSYLVANIA
REGISTERED PROFESSIONAL
ALBERT J. MAGNOTTA, JR.
ENGINEER
No.14267-E

ALBERT J. MAGNOTTA, JR., P.E.
REGISTRATION # 14267-E

SANITARY SEWAGE SYSTEM
MOUNT AIRY #1 L.L.C.
LAND DEVELOPMENT
PARADISE TOWNSHIP, MONROE COUNTY
PENNSYLVANIA

REVISIONS	DATE

DESIGNED	DRAWN
A.J.M.	A.J.M.
CHECKED	SCALE
JOB NO.	DATE
05-01-01	08-23-05

consulting engineers
p.o. box 995, scranton, pa. 18501 570-342-3101
ceco associates inc.

SHEET NO.
INDEX

Z:\CADD_2002\MT AIRY LODGE\Sewage Treatment Plant\TITLE.dwg, 8/19/2005 12:32:44 PM

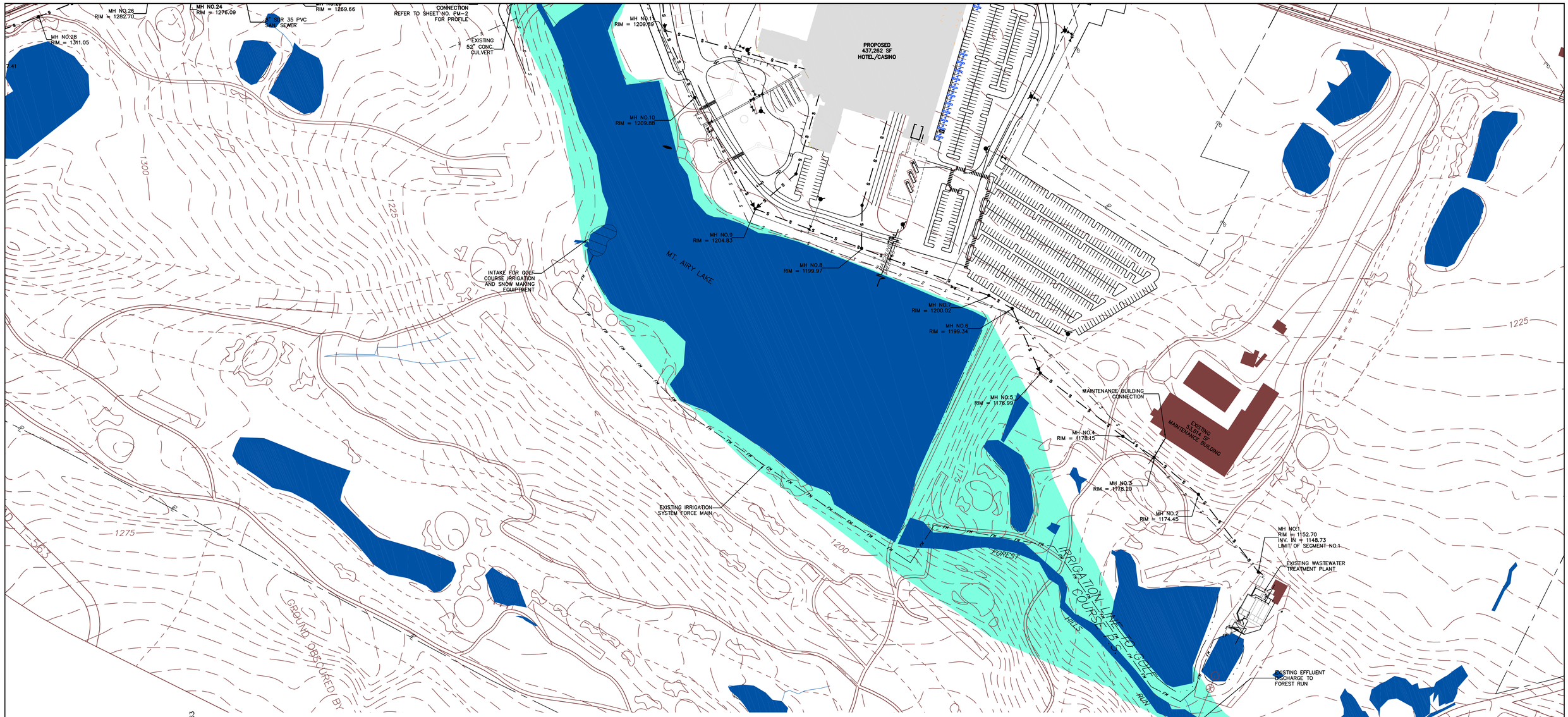

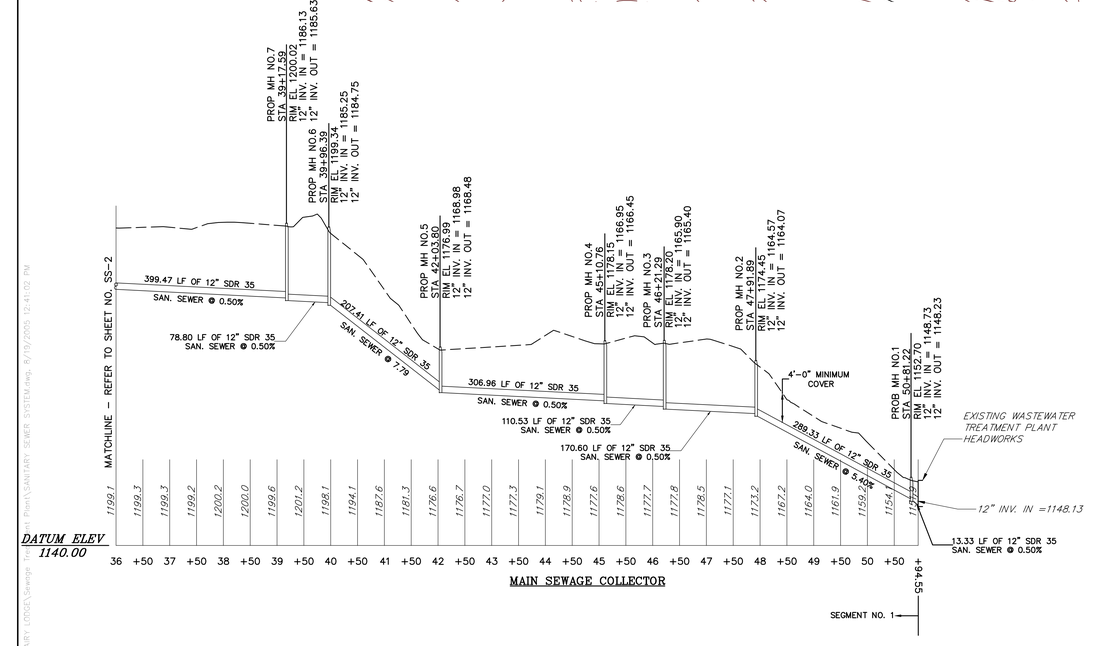

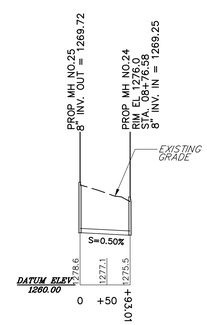

MEADOWSIDE ROAD CONNECTION

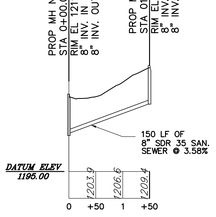

GOLF COURSE CONNECTION

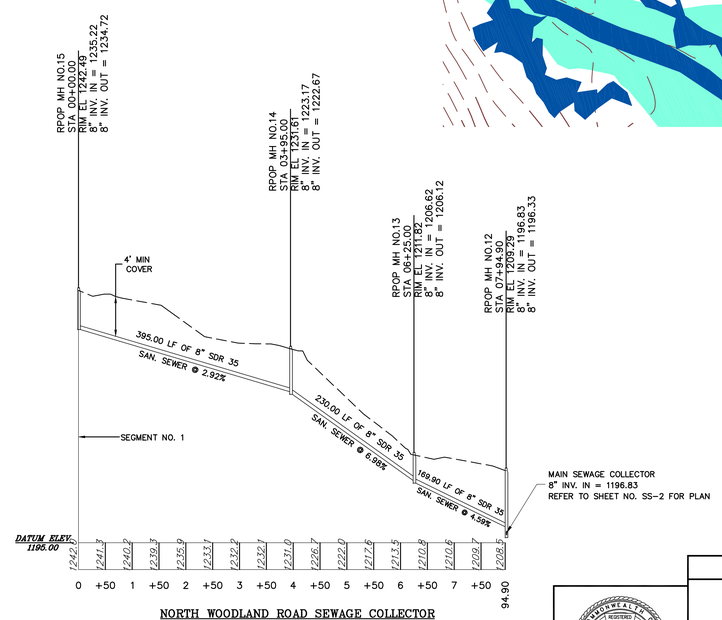

NORTH WOODLAND ROAD SEWAGE COLLECTOR

HORIZONTAL 100 0 100 200 FEET

VERTICAL 10 0 10 20 FEET

GRAPHIC SCALE

100 0 50 100 200 400

(IN FEET)
1 inch = 100 ft.

LEGEND

SYMBOL	DESCRIPTION
	Utility Pole
S	Existing Sewer Line (See Note)
S	Proposed Sewer Line
FM	Existing Sewage Force Main (See Note)
FM	Proposed Sewage Force Main
S	Onsite Sewage Disposal System
	Property Line
	Proposed Sewer Manhole

Note: All Existing Water and Sewer Utilities are to be abandoned and replaced with new community systems.

COMMONWEALTH OF PENNSYLVANIA
REGISTERED PROFESSIONAL ENGINEER
ALBERT J. MAGNOTTA, JR.
No. 14267-E

ALBERT J. MAGNOTTA, JR., P.E.
REGISTRATION # 14267-E

SANITARY SEWAGE SYSTEM

MOUNT AIRY #1 L.L.C.

LAND DEVELOPMENT

PARADISE TOWNSHIP, MONROE COUNTY
PENNSYLVANIA

REVISIONS	DATE

DESIGNED	DRAWN
A.J.M.	A.J.M.
CHECKED	SCALE
A.J.M.	1"=100'
JOB NO.	DATE
05-01-01	08-23-05

consulting engineers

p.o. box 995, scranton, pa. 18501 570-342-3101

ceco associates inc.

SHEET NO.
SS-1

Z:\CADD_2002\MT AIRY LODGE\Sewage Treatment Plant\SANITARY SEWER SYSTEM.dwg, 8/19/2005 12:41:02 PM

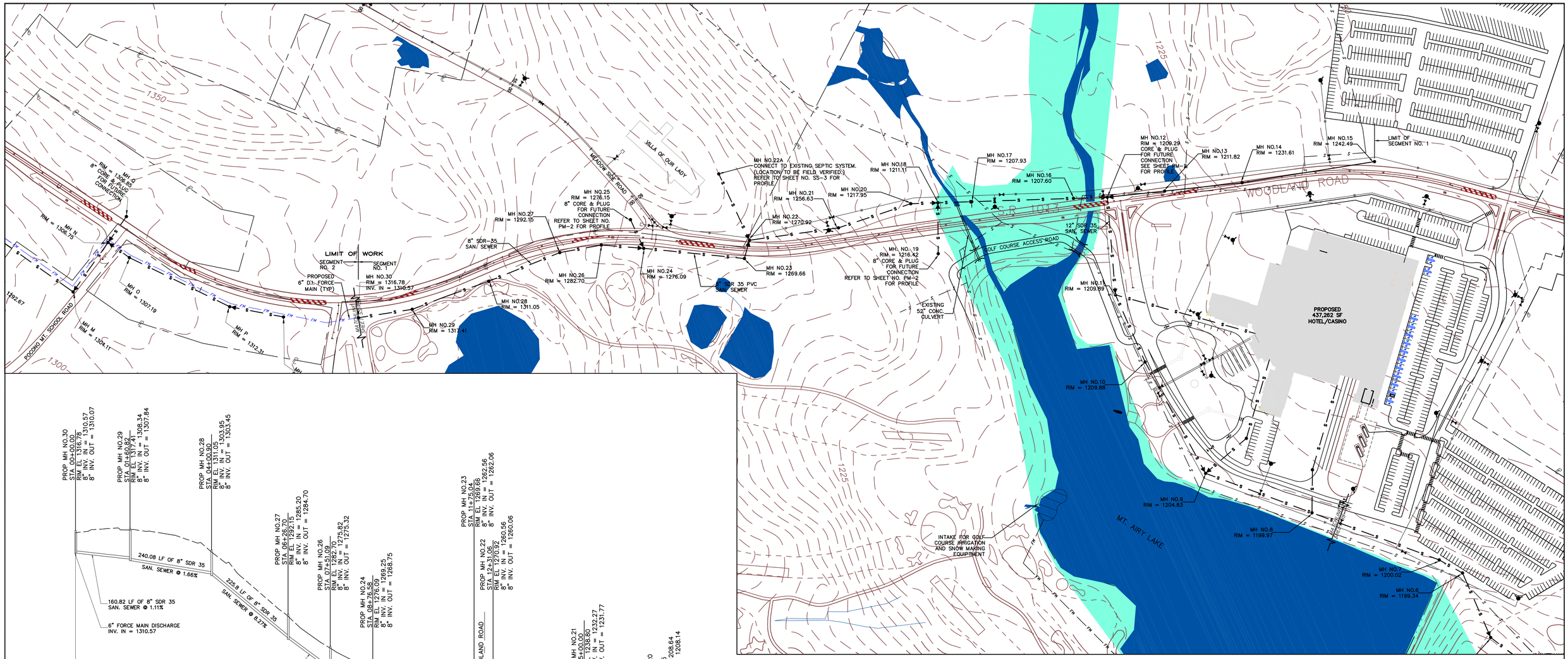

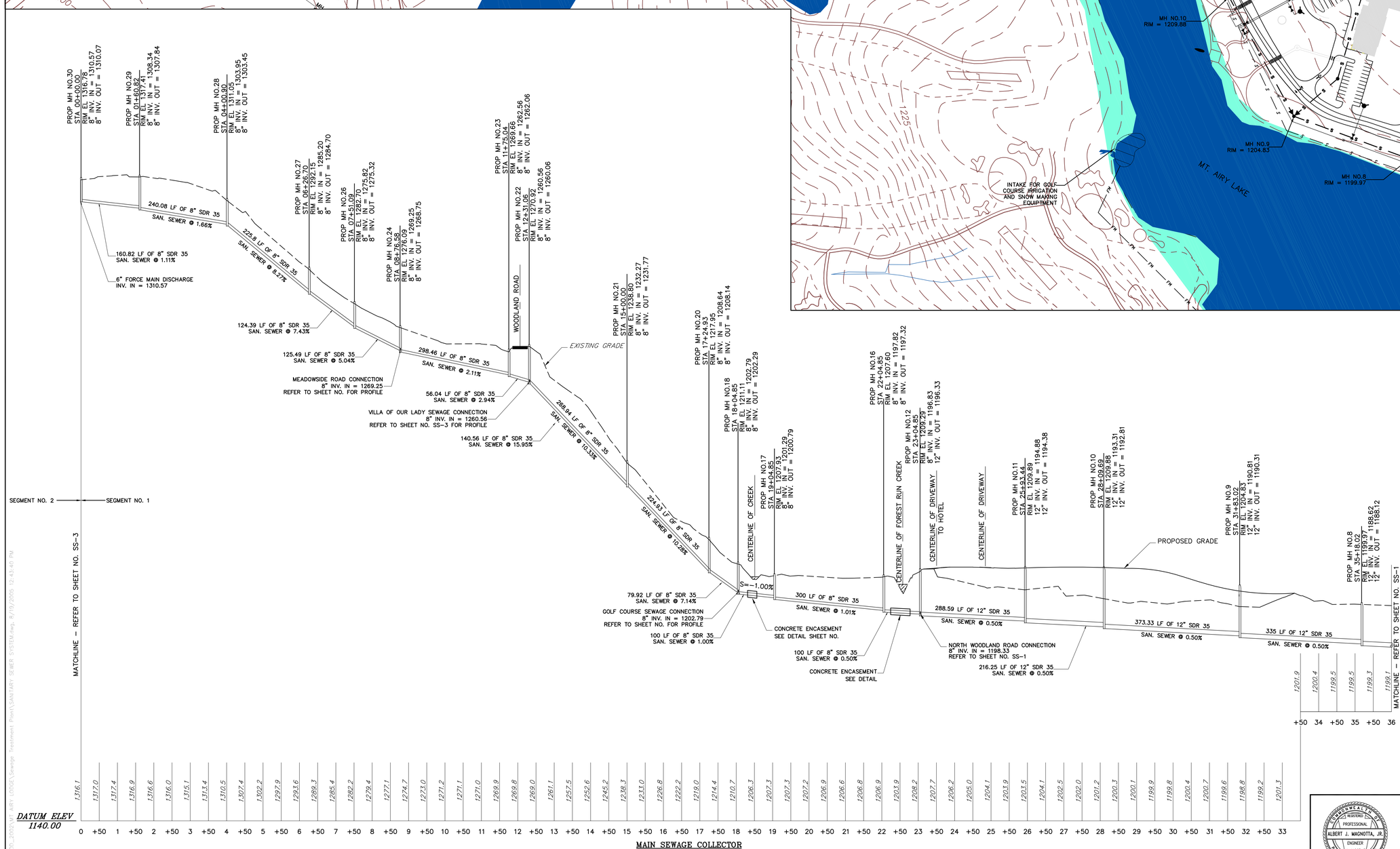

GRAPHIC SCALE

100 0 50 100 200 400

(IN FEET)
1 inch = 100 ft.

LEGEND

SYMBOL	DESCRIPTION
	Utility Pole
—S—	Existing Sewer Line (See Note)
—S—	Proposed Sewer Line
—FM—	Existing Sewage Force Main (See Note)
—FM—	Proposed Sewage Force Main
—S—	Onsite Sewage Disposal System
—℄—	Property Line
●	Proposed Sewer Manhole

Note: All Existing Water and Sewer Utilities are to be abandoned and replaced with new community systems.

SANITARY SEWAGE SYSTEM

MOUNT AIRY #1 L.L.C.

LAND DEVELOPMENT

PARADISE TOWNSHIP, MONROE COUNTY
PENNSYLVANIA

REVISIONS	DATE

DESIGNED	DRAWN
A.J.M.	A.J.M.
CHECKED	SCALE
A.C.B.	1"=100'
JOB NO.	DATE
05-01-01	08-23-05

COMMONWEALTH OF PENNSYLVANIA
REGISTERED PROFESSIONAL
ALBERT J. MAGNOTTA, JR.
ENGINEER
No.14267-E

ALBERT J. MAGNOTTA, JR., P.E.
REGISTRATION # 14267-E

consulting engineers

ceco associates inc.
p.o. box 995, scranton, pa. 18501 570-342-3101

SHEET NO.
SS-2

Z:\CADD_2002\MT AIRY LODGE\Sewage Treatment Plant\SANITARY SEWER SYSTEM.dwg, 8/19/2005 12:43:40 PM

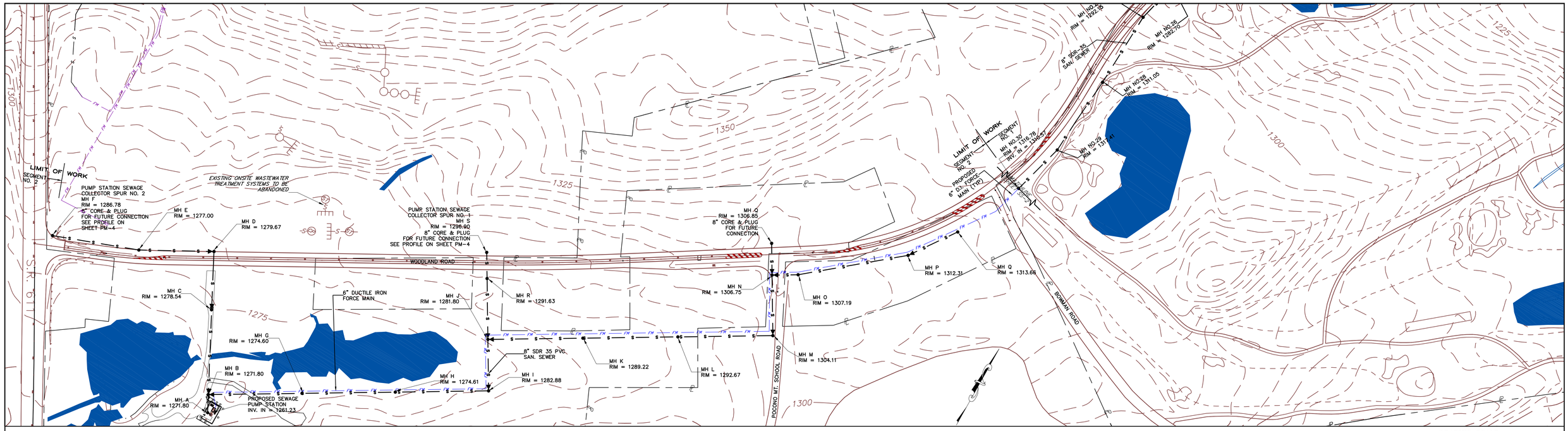

GRAPHIC SCALE

(IN FEET)
1 inch = 100 ft.

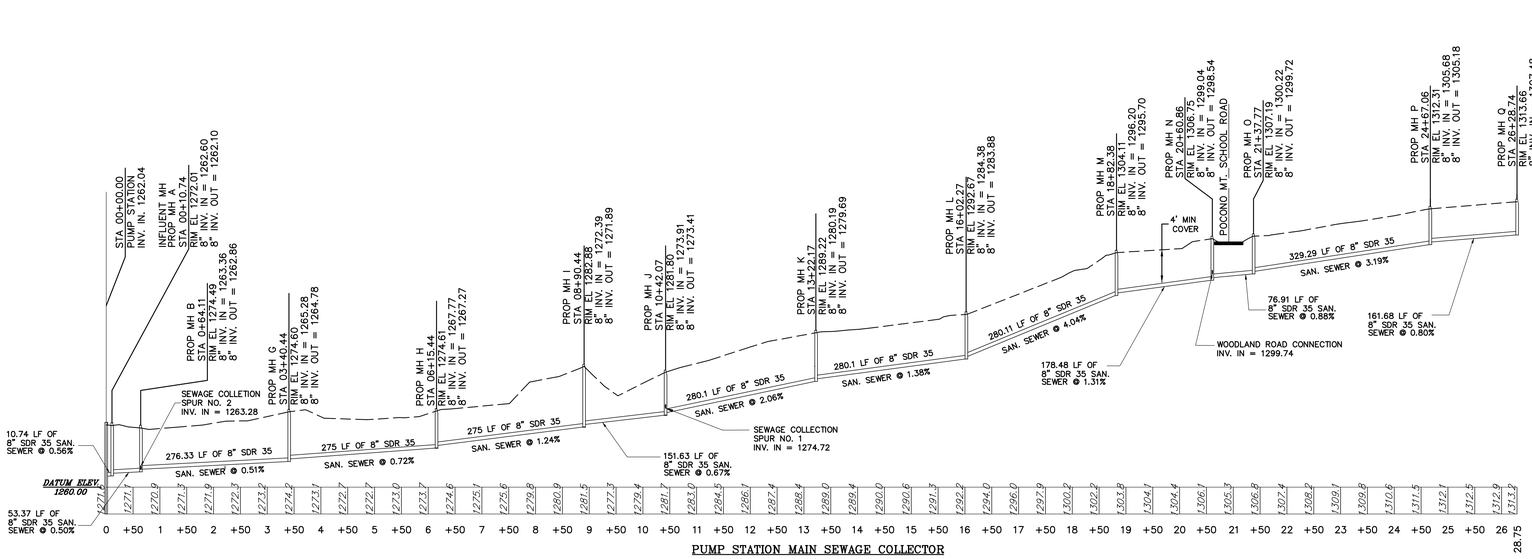

PUMP STATION MAIN SEWAGE COLLECTOR

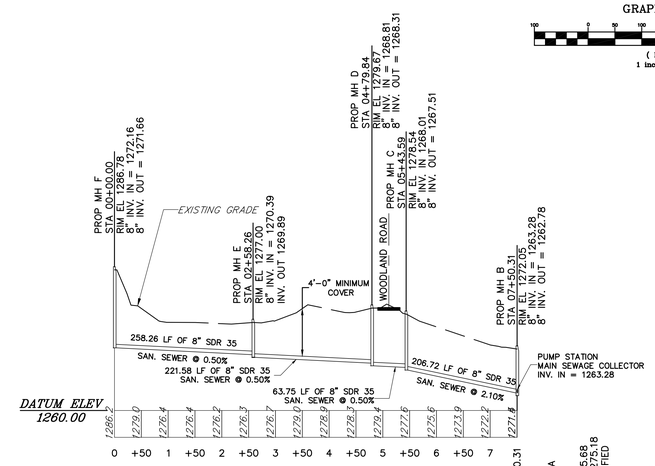

PUMP STATION SEWAGE COLLECTOR SPUR NO.2

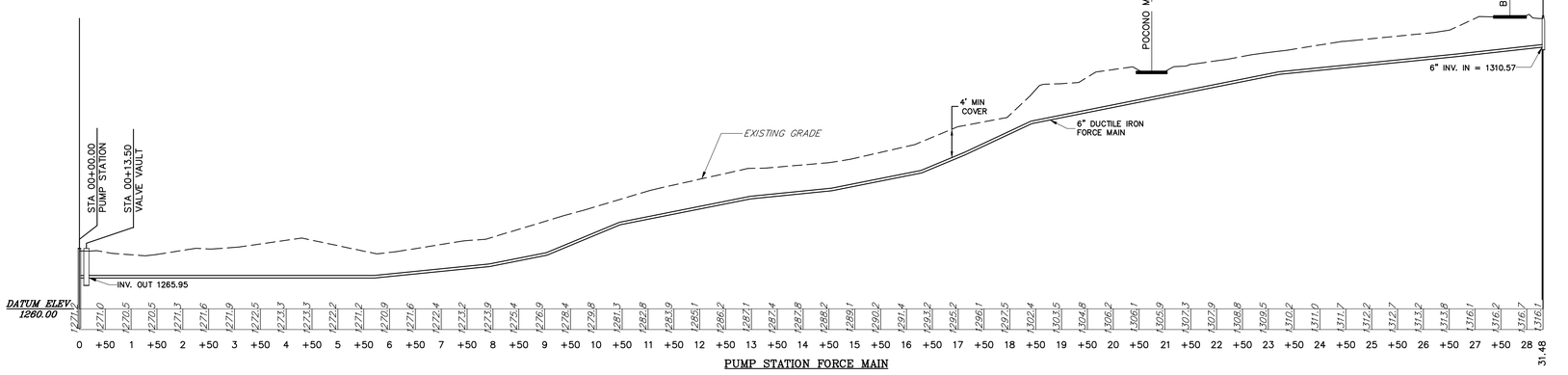

PUMP STATION FORCE MAIN

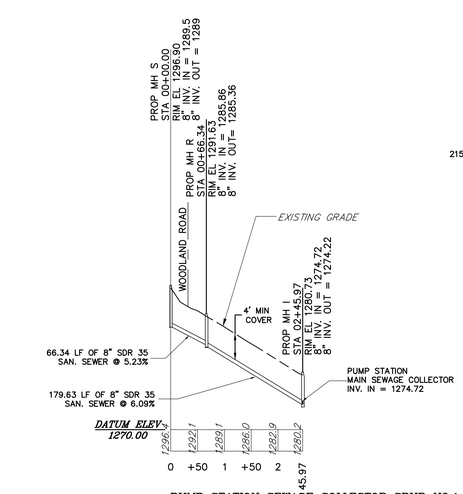

PUMP STATION SEWAGE COLLECTOR SPUR NO.1

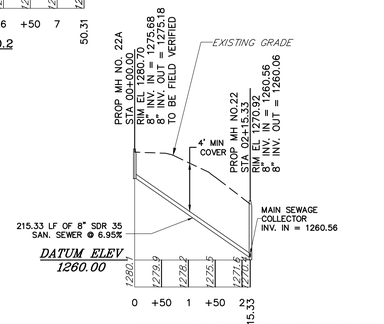

CONNECTION FROM VILLA OF OUR LADY

LEGEND

SYMBOL	DESCRIPTION
	Utility Pole
—S—	Existing Sewer Line (See Note)
—S—	Proposed Sewer Line
—FM—	Existing Sewage Force Main (See Note)
—FM—	Proposed Sewage Force Main
—S—	Onsite Sewage Disposal System
	Property Line
●	Proposed Sewer Manhole

Note: All Existing Water and Sewer Utilities are to be abandoned and replaced with new community systems.

HORIZONTAL 100 0 100 200 FEET

VERTICAL 10 0 10 20 FEET

Z:\CADD_2002\MT AIRY LODGE\Sewage Treatment Plant\SANITARY SEWER SYSTEM.dwg, 8/19/2005 12:45:31 PM

COMMONWEALTH OF PENNSYLVANIA
REGISTERED PROFESSIONAL ENGINEER
ALBERT J. MAGNOTTA, JR.
No.14267-E

ALBERT J. MAGNOTTA, JR., P.E.
REGISTRATION # 14267-E

SANITARY SEWAGE SYSTEM

MOUNT AIRY #1 L.L.C.

LAND DEVELOPMENT

PARADISE TOWNSHIP, MONROE COUNTY
PENNSYLVANIA

REVISIONS	DATE

DESIGNED	DRAWN
A.J.M.	A.J.M.
CHECKED	SCALE
A.C.B.	1"=100'
JOB NO.	DATE
05-01-01	08-23-05

consulting engineers

p.o. box 995, scranton, pa. 18501 570-342-3101

ceco associates inc.

SHEET NO.
SS-3

NOTES

- PRECAST CONCRETE MANHOLES SHALL MEET THE REQUIREMENTS ASTM C478
- PRECAST CONCRETE MANHOLES SHALL HAVE A MINIMUM DIAMETER OF 4'–0" AND SHALL BE LINED WITH AGRU SURE–GRIP HDPE LINER. ALTERNATES MUST BE APPROVED BY THE ENGINEER BEFORE CONSTRUCTION.
- APPLY TWO COATS OF BITUMISTIC WATERPROOFING COMPOUND TO THE EXTEROIR OF ALL STRUCTURES.

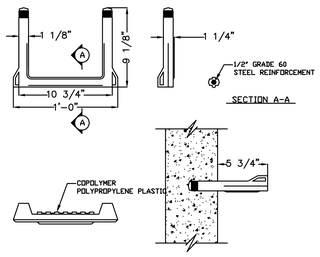

MANHOLE STEP DETAIL

NOT TO SCALE

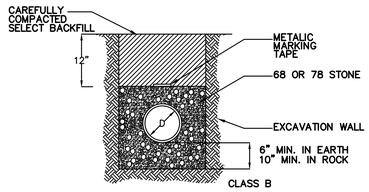

PVC OR HDPE PIPE BEDDING DETAIL

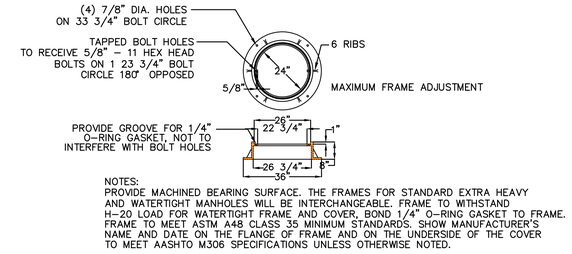

NOTES:
PROVIDE MACHINED BEARING SURFACE. THE FRAMES FOR STANDARD EXTRA HEAVY AND WATERTIGHT MANHOLES WILL BE INTERCHANGEABLE. FRAME TO WITHSTAND H–20 LOAD FOR WATERTIGHT FRAME AND COVER, BOND 1/4" O–RING GASKET TO FRAME. FRAME TO MEET ASTM A48 CLASS 35 MINIMUM STANDARDS. SHOW MANUFACTURER'S NAME AND DATE ON THE FLANGE OF FRAME AND ON THE UNDERSIDE OF THE COVER TO MEET AASHTO M306 SPECIFICATIONS UNLESS OTHERWISE NOTED.

STANDARD MANHOLE COVER DETAIL

NOT TO SCALE

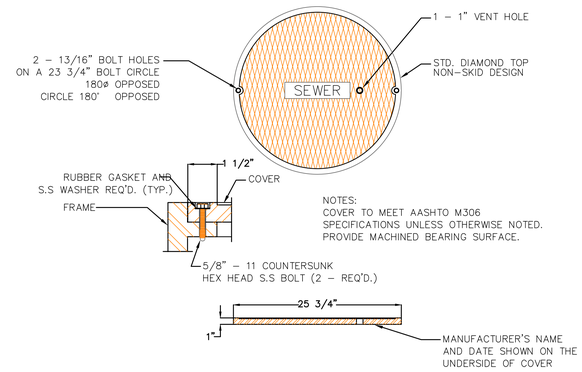

NOTES:
COVER TO MEET AASHTO M306 SPECIFICATIONS UNLESS OTHERWISE NOTED.
PROVIDE MACHINED BEARING SURFACE.

MANHOLE FRAME DETAIL

NOT TO SCALE

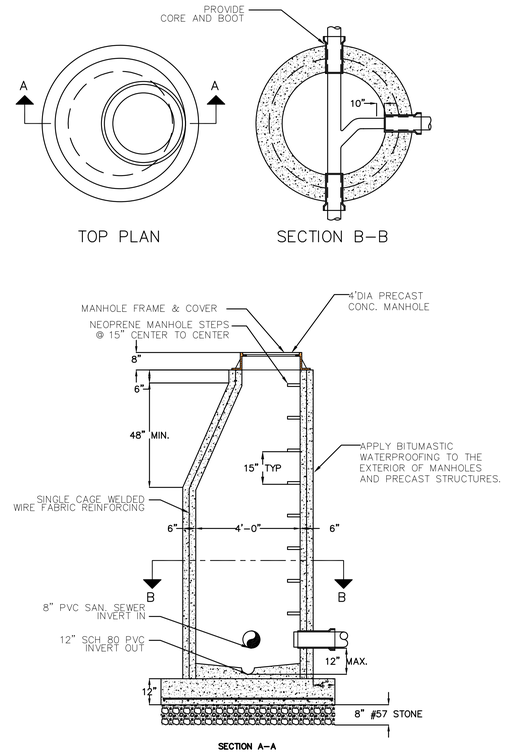

TYPICAL PRECAST MANHOLE DETAIL

NOT TO SCALE

Proposed Sanitary Sewage System

MH No.	CL At Sta.	Rim Elev.	Manhole Height	Inv. In	Inv. Out	Distance Betw een MH	Slope	Mannings "n"	Pipe Diameter	X-Sect. Area	Wetted Perimeter	Hydraulic Radius	V Based On Slope (fps)	Flow Increase (gpd)	Base Flow (gpd)	Base Flow (gpm)	Remarks
28	00+00.00	1,316.78	6.71	1,310.57	1,310.07									124,856	124,856	87	Discharge From Pump Station
						160.82	0.011	0.013	0.667	0.35	2.10	0.17	3.59				
27	01+60.82	1,317.41	9.57	1,308.34	1,307.84										124,856	87	
						240.08	0.016	0.013	0.667	0.35	2.10	0.17	4.41				
26	04+00.90	1,311.05	7.60	1,303.95	1,303.45										124,856	87	
						225.80	0.081	0.013	0.667	0.35	2.10	0.17	9.85				
25	06+26.70	1,292.15	7.45	1,285.20	1,284.70										124,856	87	
						124.39	0.071	0.013	0.667	0.35	2.10	0.17	9.25				
24	07+51.09	1,282.70	7.38	1,275.82	1,275.32										124,856	87	
						125.49	0.048	0.013	0.667	0.35	2.10	0.17	7.62				
23	08+76.58	1,276.09	7.34	1,269.25	1,268.75										124,856	87	
						298.46	0.021	0.013	0.667	0.35	2.10	0.17	4.99				
22	11+75.04	1,269.66	7.60	1,262.56	1,262.06									2,114	126,970	88	Villa (Beginning of Phase I Flow)
						56.02	0.027	0.013	0.667	0.35	2.10	0.17	5.67				
21	12+31.06	1,270.92	10.86	1,260.56	1,260.06										126,970	88	
						140.56	0.154	0.013	0.667	0.35	2.10	0.17	13.58				
20	13+71.62	1,256.63	18.69	1,238.44	1,237.94										126,970	88	
						353.31	0.083	0.013	0.667	0.35	2.10	0.17	9.97				
19	17+24.93	1,217.95	9.81	1,208.64	1,208.14										126,970	88	
						79.92	0.067	0.013	0.667	0.35	2.10	0.17	8.96				
18	18+04.85	1,211.11	8.82	1,202.79	1,202.29									5,788	132,758	92	Golf Course Restaruant
						100.00	0.010	0.013	0.667	0.35	2.10	0.17	3.46				
17	19+04.85	1,207.93	7.14	1,201.29	1,200.79										132,758	92	
						300.00	0.010	0.013	0.667	0.35	2.10	0.17	3.45				
16	22+04.85	1,207.60	10.28	1,197.82	1,197.32										132,758	92	
						100.00	0.005	0.013	0.667	0.35	2.10	0.17	2.42				
12	23+04.85	1,209.29	12.96	1,196.83	1,196.33									1,800	134,558	93	RV Lot
						288.59	0.005	0.013	1	0.79	3.14	0.25	3.22				
11	25+93.44	1,209.89	15.51	1,194.88	1,194.38										134,558	93	
						216.25	0.005	0.013	1	0.79	3.14	0.25	3.19				
10	28+09.69	1,209.88	17.07	1,193.31	1,192.81										134,558	93	
						373.33	0.005	0.013	1	0.79	3.14	0.25	3.32				
9	31+83.02	1,204.83	14.52	1,190.81	1,190.31									146,298	280,856	195	Hotel/Casino
						335.00	0.005	0.013	1	0.79	3.14	0.25	3.22				
8	35+18.02	1,199.97	11.85	1,188.62	1,188.12										280,856	195	
						399.57	0.005	0.013	1	0.79	3.14	0.25	3.20				
7	39+17.59	1,200.02	14.39	1,186.13	1,185.63										280,856	195	
						78.80	0.005	0.013	1	0.79	3.14	0.25	3.15				
6	39+96.39	1,199.34	14.59	1,185.25	1,184.75										280,856	195	
						207.41	0.076	0.013	1	0.79	3.14	0.25	12.51				
5	42+03.80	1,176.99	8.51	1,168.98	1,168.48										280,856	195	
						306.96	0.005	0.013	1	0.79	3.14	0.25	3.20				
4	45+10.76	1,178.15	11.70	1,166.95	1,166.45										280,856	195	
						110.53	0.005	0.013	1	0.79	3.14	0.25	3.20				
3	46+21.29	1,178.20	12.80	1,165.90	1,165.40									6,727	287,583	200	
						170.60	0.005	0.013	1	0.79	3.14	0.25	3.16				
2	47+91.89	1,174.45	10.38	1,164.57	1,164.07										287,583	200	
						289.33	0.053	0.013	1	0.79	3.14	0.25	10.45				
1	50+81.22	1,152.70	4.47	1,148.73	1,148.23										287,583	200	
						13.33	0.008	0.013	1	0.79	3.14	0.25	3.93				
WWTP	50+94.55	1,152.20	4.07	1,148.13	N/A	N/A	0.000	0.013	1	0.79	3.14	0.25	0.00		287,583	200	WWTP
1gpm =	0.002228	ft3/s															
													Average Capacity =	5.50	Total =	287,583	200

Note: Flow rates assume full pipe capacity

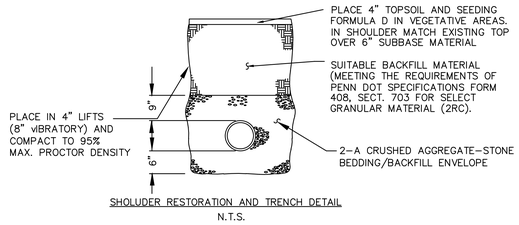

SHOLUDER RESTORATION AND TRENCH DETAIL

N.T.S.

PIPE BEDDING AND ENCASEMENT DETAILS

NOT TO SCALE

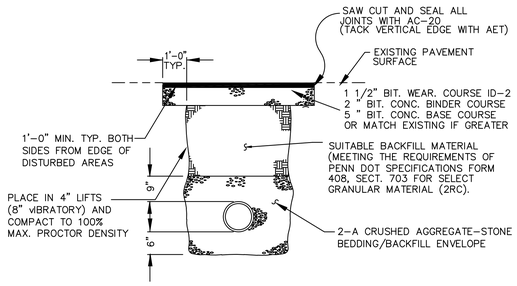

ROADWAY RESTORATION AND TRENCH DETAIL

N.T.S.

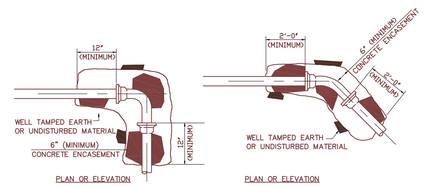

TYPICAL ALL PRESSURE LINE FITTINGS CONCRETE THRUST BLOCKS

SPECIFICATION

- GRAVITY SEWER LINE SHALL BE HDPE SEWER MAIN SDR–35 MEETING ASTM D2241
- FORCE MAIN SHALL BE 6" CLASS 52 DI PRESSURE PIPE MEETING ASTM 1785
- PRECAST CONCRETE MANHOLES SHALL MEET THE REQUIREMENTS ASTM C478
- SUBMERSIBLE PUMPS SHALL BE PUMPEX K100 F–CA3228 VORTEX PUMP CAPABLE OF DELIVERING 217 GPM @ 65 TDH. MOTOR SHALL BE 7.5 HP – 3 PHASE – 60 HERTZ 120/208 VOLTAGE.
- ACCESS COVER SHALL BE HALLIDAY PRODUCTS – SERIES W1S ACCESS DOOR (SEE DETAILS)
- EXHAUST FANS SHALL BE GREENHECK MODEL G101 CAPABLE OF DELIVERING 747 CFM FOR A MINIMUM OF OF 30 AIR CHANGES PER HOUR.
- FORCEMAIN CHECK VALVE SHALL BE A SINGER RED–VALVE SERIES 39 WITH A 6" NOMINAL DIAMETER CAPEABLE OF WITHSTANDING 200 POUNDS OF PRESSURE
- FLOW CONTROL VALVES SHALL BE A SINGER RED–VALVE SERIES 75 PINCH VALVES. ALL INTERNAL COMPONENTS MUST BE RESISTANT TO LEACHATE CORROSION.
- PRESSURE GAUGE SHALL BE REDVALVE SERIES 40W WITH A RANGE FROM 0 TO 300 PSI.
- VALVE VAULT DRAIN CHECK SHALL BE A 2" RED–VALVE TIDEFLEX CHECK VALVE SERIES TF–1

COMMONWEALTH OF PENNSYLVANIA
REGISTERED PROFESSIONAL
ALBERT J. MAGNOTTA, JR.
ENGINEER
No.14267-E

ALBERT J. MAGNOTTA, JR., P.E.
REGISTRATION # 14267–E

SANITARY SEWAGE SYSTEM DETAILS

MOUNT AIRY #1 L.L.C.

LAND DEVELOPMENT

PARADISE TOWNSHIP, MONROE COUNTY PENNSYLVANIA

REVISIONS	DATE

DESIGNED	DRAWN
A.J.M.	A.J.M.
CHECKED	SCALE
A.C.B.	N/A
JOB NO.	DATE
05–01–01	08–23–05

consulting engineers

p.o. box 995, scranton, pa. 18501 570–342–3101

ceco associates inc.

SHEET NO.
SS–4

Z:\CADD_2002\MT AIRY LODGE\Sewage Treatment Plant\SANITARY SEWER SYSTEM.dwg, 8/19/2005 12:49:25 PM

NOTE:

1. COAT THE OUTSIDE OF THE VALVE VAULT AND WET WELL WITH TWO COATS OF BITUMISTIC
2. LINE THE INTERIOR OF THE WET WELL WITH "AGRU SURE GRIP" HDPE LINING SYSTEM (OR EQUAL).
3. CONTRACTOR TO PROVIDE E-ZLIFT CHAIN DEVICE TO AID PUMP REMOVAL.
4. ALL ELECTRICAL AND MECHANICAL DEVICES IN WET WELL TO USE STAINLESS STEEL FASTENERS.
5. NO EXPOSED CONDUITS ON TOP OF ANY STRUCTURE ALLOWED.
6. CONTRACTOR SHALL INSTALL 1/4" FRP GRATING OVER WET WELL ACCESS HATCHES. (SEE DETAIL ON SHEET SS-6)

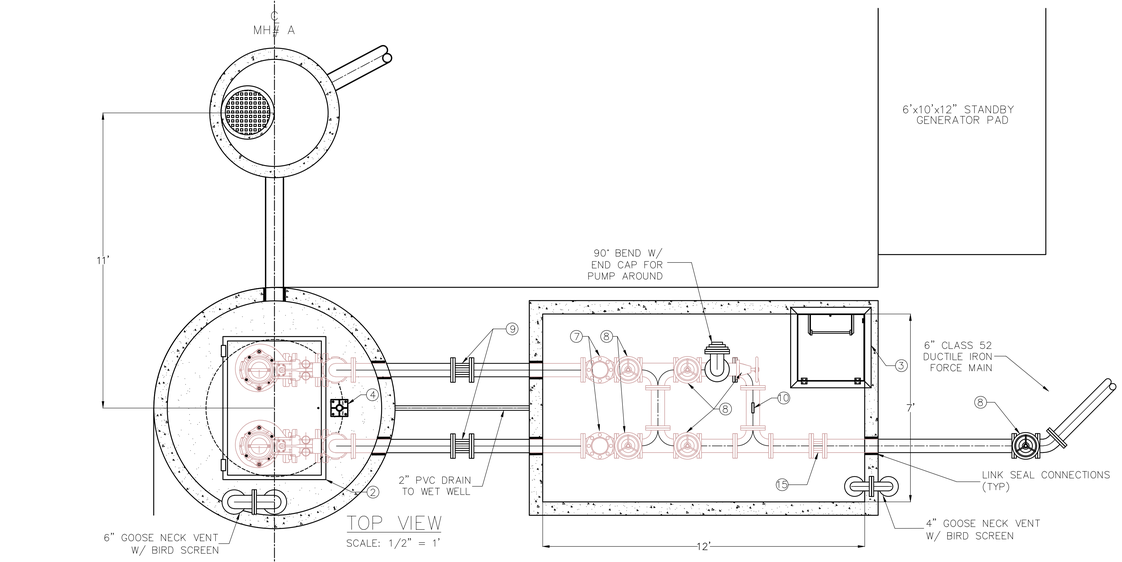

TOP VIEW
SCALE: 1/2" = 1'

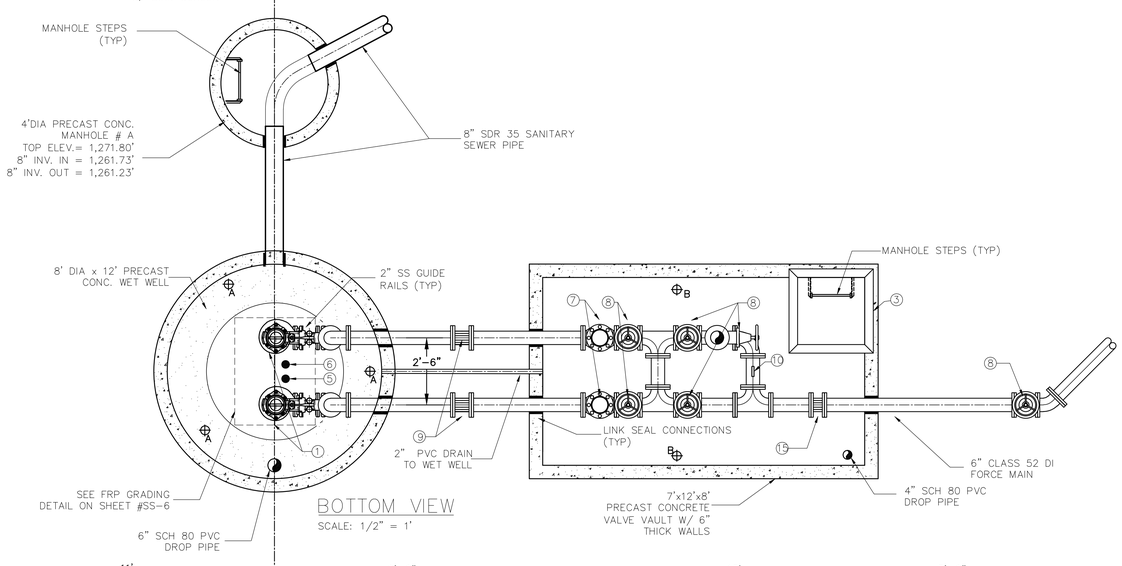

BOTTOM VIEW
SCALE: 1/2" = 1'

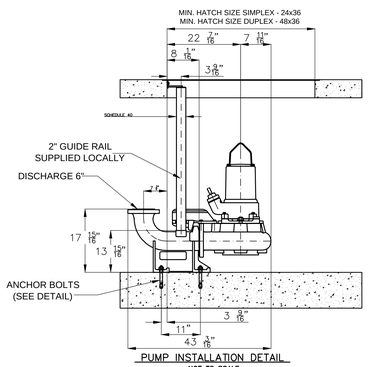

PUMP INSTALLATION DETAIL
NOT TO SCALE

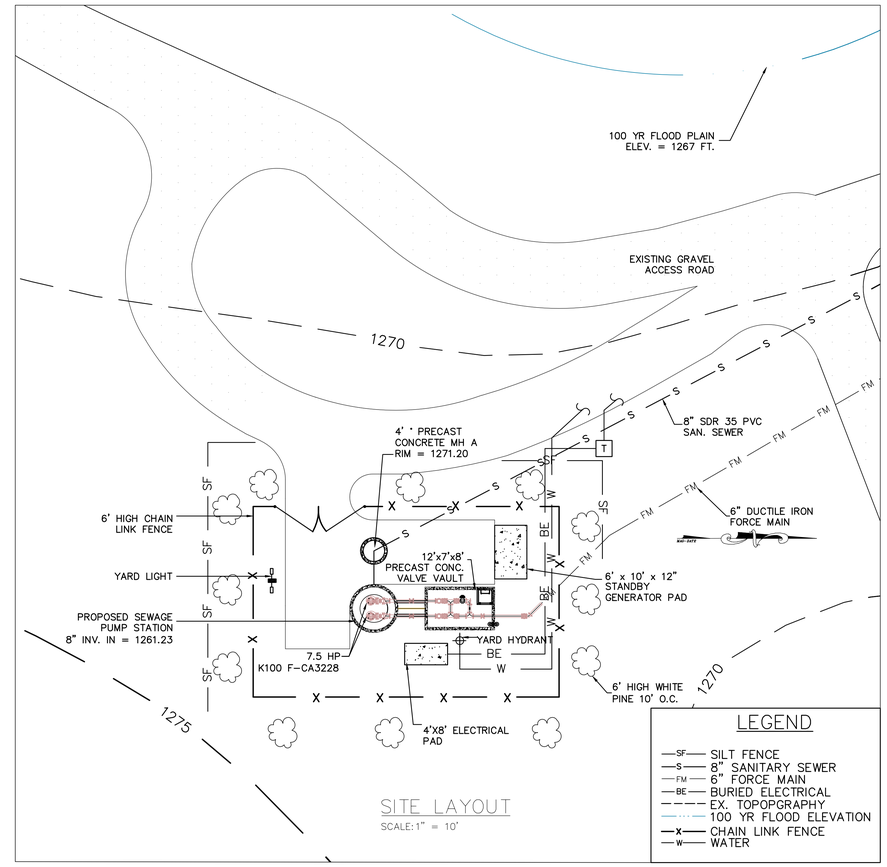

SITE LAYOUT
SCALE:1" = 10'

LEGEND

- SF — SILT FENCE
- S — 8" SANITARY SEWER
- FM — 6" FORCE MAIN
- BE — BURIED ELECTRICAL
- EX. TOPOPGRAPHY
- 100 YR FLOOD ELEVATION
- X — CHAIN LINK FENCE
- W — WATER

#	PART NAME	MANUFACTURER	MODEL NO.	QTY	REMARKS
1	SUBMERSIBLE PUMP	PUMPEX	K100 F-CA3228	2	7.5 HP
2	36"X48" ACCESS HATCH	HALLIDAY	W2S3648	1	SINGLE LEAF
3	30"X30" ACCESS HATCH	HALLIDAY	W1S3030	1	SINGLE LEAF
4	1/2 TON HOIST	HALLIDAY	D2B36B	1	BASE MODEL NO: D2F
5	PRESSURE TRANSDUCER	CONTEGRA	SLX 130-M	1	
6	FLOATS	US FILTER	9G	2	
7	6" SWING CHECK VALVE	MILLIKEN	AWWA C-508-93	2	CV W/ LIMIT SWITCH
8	6" WEDGE VALVE	MUELLER	A-2361	6	
9	PIPE COUPLING	DRESSER	STYLE 38	2	
10	PRESSURE GAUGE	ASHCROFT	1032	1	
11	TIDEFLEX CHECK VALVE	RED VALVE	TF-1	1	W/ SS BAND
12	DIESEL GENERATOR	ONAN / CUMMINS	DGBB, 44KW	1	PORTABLE
13	PUMP CONTROL	CONTEGRA	SM 2000	1	PUMP AND ALARM
14	YARD LIGHT	RUUD	RR425MP	1	
15	FLOW METER	EASTECH/BADGER		1	ULTRASONIC

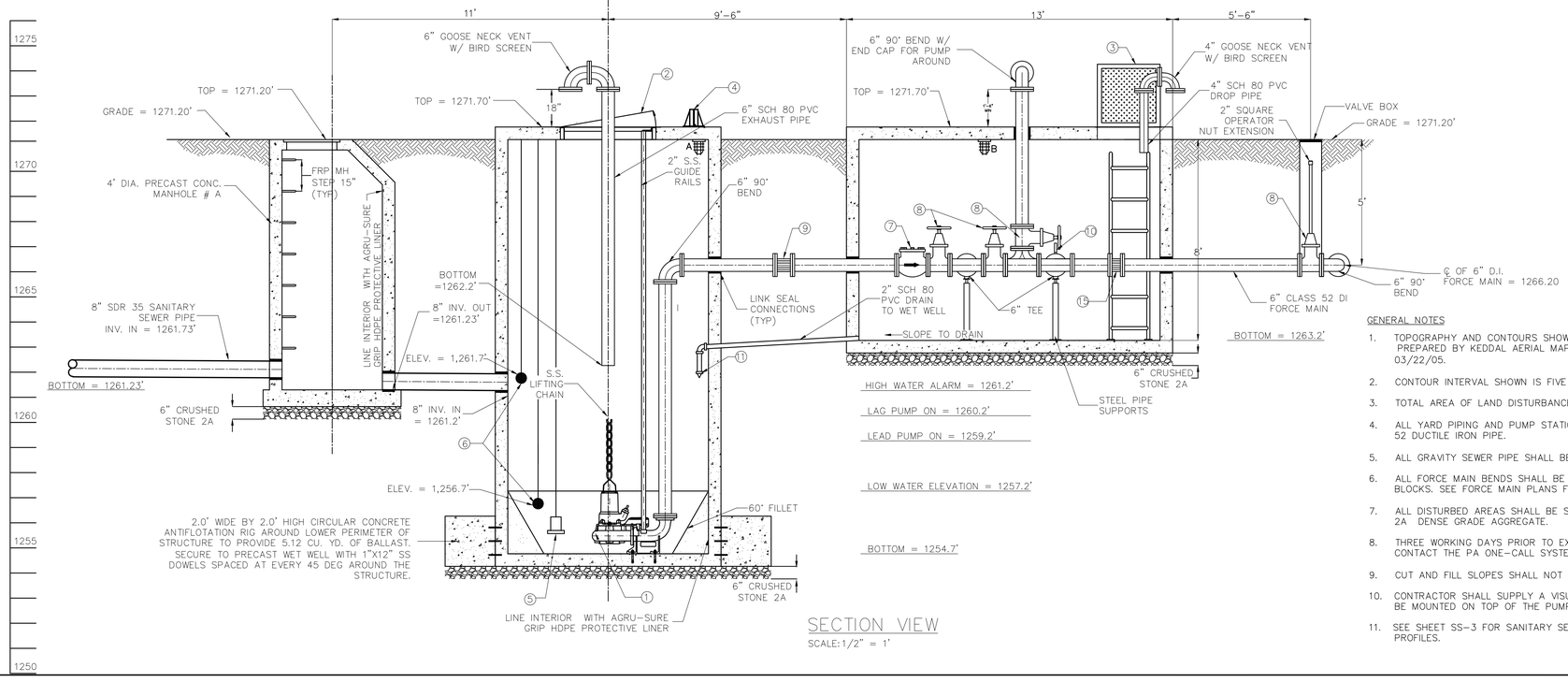

SECTION VIEW
SCALE:1/2" = 1'

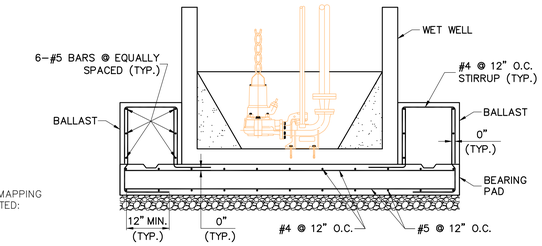

FOUNDATION DESIGN DETAIL
NOT TO SCALE

GENERAL NOTES

1. TOPOGRAPHY AND CONTOURS SHOWN TAKEN FROM AERIAL MAPPING PREPARED BY KEDDAL AERIAL MAPPING, PHOTOGRAPHY DATED: 03/22/05.
2. CONTOUR INTERVAL SHOWN IS FIVE (5) FOOT.
3. TOTAL AREA OF LAND DISTURBANCE = 0.682 AC.
4. ALL YARD PIPING AND PUMP STATION FORCE MAIN SHALL BE 6" CLASS 52 DUCTILE IRON PIPE.
5. ALL GRAVITY SEWER PIPE SHALL BE 8" SDR-35 HDPE.
6. ALL FORCE MAIN BENDS SHALL BE BLOCKED WITH CONCRETE THRUST BLOCKS. SEE FORCE MAIN PLANS FOR DETAILS.
7. ALL DISTURBED AREAS SHALL BE SURFACED WITH 4" OF PENNDOT NO. 2A DENSE GRADE AGGREGATE.
8. THREE WORKING DAYS PRIOR TO EXCAVATION THE CONTRACTOR MUST CONTACT THE PA ONE-CALL SYSTEM INC., PHONE: 1-800-242-1776.
9. CUT AND FILL SLOPES SHALL NOT EXCEED A 3:1 (H:V) GRADE.
10. CONTRACTOR SHALL SUPPLY A VISUAL AND AUDIBLE ALARM SYSTEM TO BE MOUNTED ON TOP OF THE PUMP CONTROL PANEL.
11. SEE SHEET SS-3 FOR SANITARY SEWER FORCE MAIN & COLLECTION PROFILES.

COMMONWEALTH OF PENNSYLVANIA REGISTERED PROFESSIONAL ENGINEER ALBERT J. MAGNOTTA, JR. No.14267-E

ALBERT J. MAGNOTTA, JR., P.E.
REGISTRATION # 14267-E

SANITARY SEWAGE SYSTEM

MOUNT AIRY #1 L.L.C.

LAND DEVELOPMENT

PARADISE TOWNSHIP, MONROE COUNTY PENNSYLVANIA

consulting engineers

p.o. box 995, scranton, pa. 18501 570-342-3101

ceco associates inc.

REVISIONS	DATE

DESIGNED	DRAWN
A.J.M.	A.J.M.
CHECKED	SCALE
A.C.B.	N/A
JOB NO.	DATE
05-01-01	08-23-05

SHEET NO. SS-5

Z:\CADD_2002\MT AIRY LODGE\Sewage Treatment Plant\pump station\PS_PLAN & SECT_SS-5.dwg, 8/19/2005 1:05:21 PM

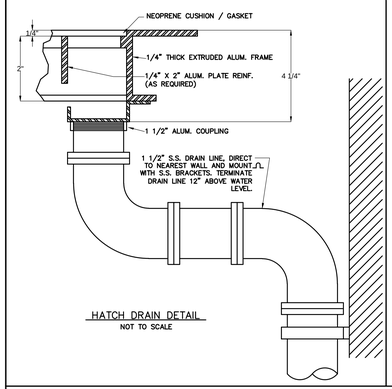

HATCH DRAIN DETAIL
NOT TO SCALE

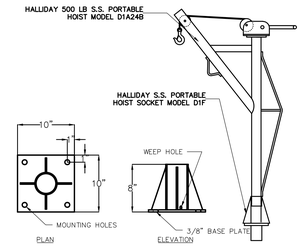

1/2 TON HALLIDAY HOIST AND SOCKET DETAIL
NOT TO SCALE

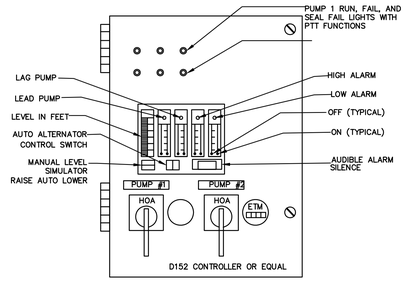

PUMP CONTROL PANEL DETAIL
N.T.S.

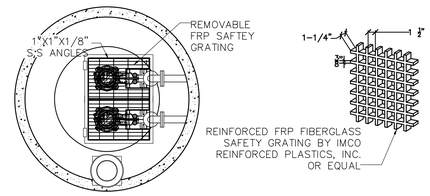

FRP SAFETY GRATING DETAIL
NOT TO SCALE

LIGHTING SCHEDULE								
FIXTURE TYPE	MANUFACTURER	CATALOG NO.	LAMP		VOLTS	MOUNTING	LOCATION	REMARKS
			NO.	TYPE				
A	APPELTON	MLWF643 G2GAIL	3	32WPLT	120	WALL	WET WELL	VAPOR TIGHT, WATERTIGHT, NEMA 4X. UL LISTED FOR CLASS I, DIVISION II. CLASS 2, DIVISION 1 & 2. CLASS 3 AND SIMULTANEOUS PRESENCE
B	APPELTON	VC1075G-A	2	100W INC.	120	WALL	VALVE VAULT	ENCLOSED AND GASKETED + WATER TIGHT
C	RUUD	RR425MP PS4S15CBZ	1	250W MH	120	POLE	OUTSIDE	WITH PHOTO CELL ON 15 FT. POLE

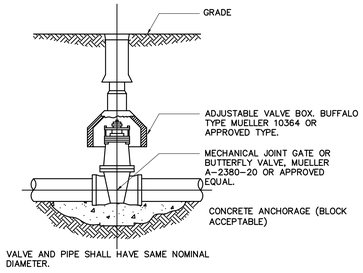

TYPICAL VALVE INSTALLATION DETAIL
NOT TO SCALE

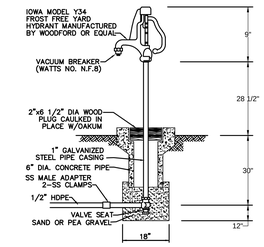

YARD HYDRANT DETAIL
N.T.S.

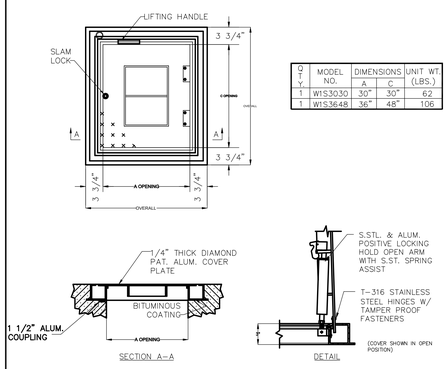

QTY.	MODEL NO.	DIMENSIONS A	DIMENSIONS C	UNIT WT. (LBS.)
1	W1S3030	30"	30"	62
1	W1S3648	36"	48"	106

SERIES W1S ACCESS DOOR
NOT TO SCALE

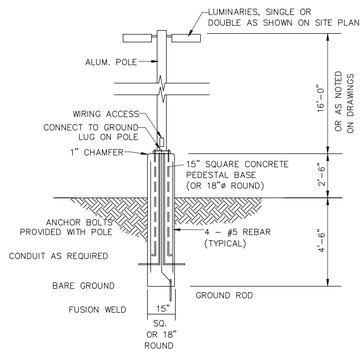

LIGHT POLE DETAIL
NOT TO SCALE

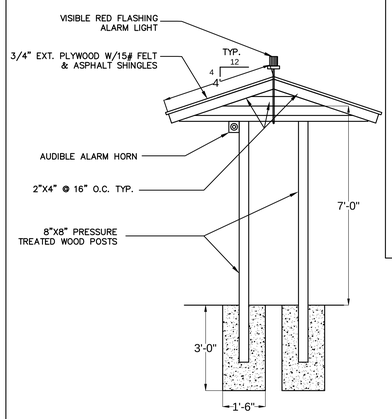

8' LONG WEATHER SHED OVER ELECTRIC CONTROL PANEL
NOT TO SCALE

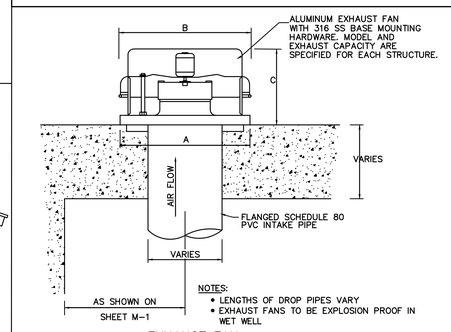

NOTES:
- LENGTHS OF DROP PIPES VARY
- EXHAUST FANS TO BE EXPLOSION PROOF IN WET WELL

EXHAUST FAN
NOT TO SCALE

CONDUIT & WIRE SIZE SCHEDULE (UNLESS OTHERWISE SHOWN)					
CIRCUIT BREAKER TRIP	GROUND WIRE SIZE	1 OR 2 POLE		3 POLE	
		CONDUIT	WIRE	CONDUIT	WIRE
15A	1 #12	1/2"	#12	1/2"	#12
20A	1 #12	1/2"	#12	1/2"	#12
30A	1 #10	1/2"	#10	3/4"	#10
40A	1 #10	3/4"	#8	1"	#8
50A	1 #10	3/4"	#8	1"	#8
60A	1 #8	1"	#6	1"	#6
70A	1 #8	1"	#4	1-1/4"	#4
80A	1 #8	1-1/4"	#4	1-1/4"	#4
90A	1 #8	1-1/4"	#2	1-1/4"	#2
100A	1 #8	1-1/4"	#2	1-1/4"	#2

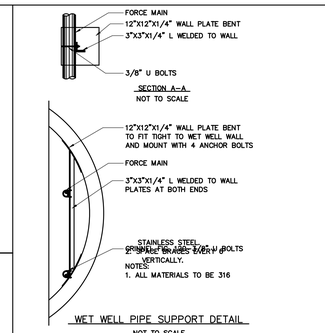

WET WELL PIPE SUPPORT DETAIL
NOT TO SCALE

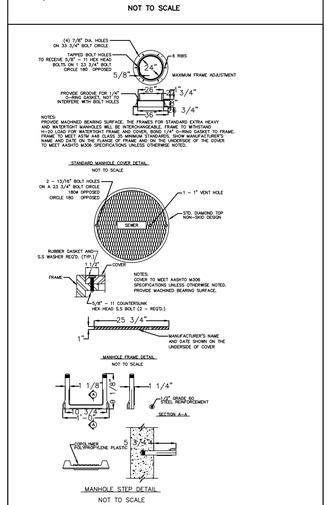

PUMP STATION
DESIGN CALCULATONS

C. DESIGN RATE OF FLOW
- TOTAL DAILY FLOW = 124,856 gpd
- FLOW DURATION = 24 hrs
- AVERAGE RATE OF FLOW = 86.71 gpm
- PEAK FACTOR = 2.5
- PEAK RATE OF FLOW = 216.76 gpm
- FORCE MAIN SIZE = 6"
- VELOCITY = 2.46 fps

D. STATIC HEAD
- HIGHEST ELEVATION IN FORCE MAIN = 1,311.48 ft.
- LOW WATER LEVEL IN WET WELL = 1,261.95 ft.
- STATIC HEAD = 49.53 ft.

E. FRICTION HEAD
- LENGTH OF FORCE MAIN = 2,835.31 ft.
- EQUIVALENT LENGTH OF VALVES & FITTINGS = 95.52 ft.
- TOTAL EQUIVALENT LENGTH OF PIPE, VALVES, AND FITTINGS = 2,930.83 ft.
- HAZEN- WILLIAMS COEFFICIENT (C=120) = 0.611
- FRICTION HEAD = 17.91 ft.

F. VELOCITY HEAD ($V^2/2g$) = 0.096 ft.

G. TOTAL DYNAMIC HEAD = 65 ft.

H. PUMP HORSEPOWER = 7.5 Hp

I. IMPELLER DIAMETER = 228 mm

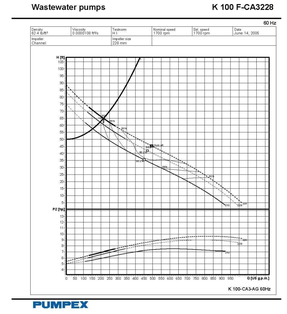

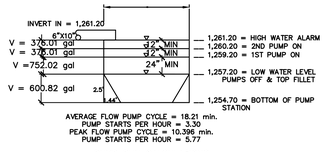

PUMP RUN CALCULATIONS

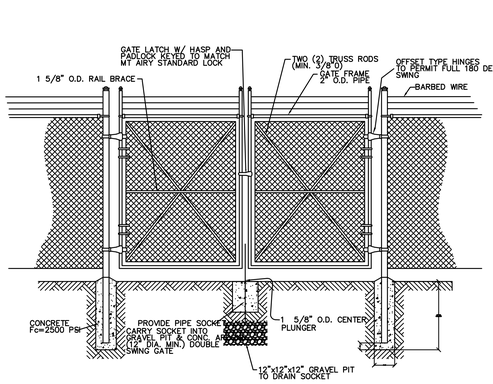

DOUBLE GATE DETAIL
N.T.S.

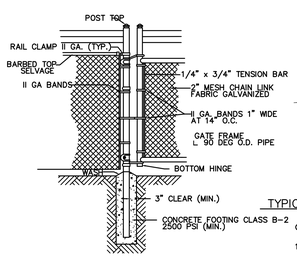

GATE DETAIL
N.T.S.

NOTE:
FENCE, GATE, POSTS, ETC. TO BE BLACK VINYL COATED

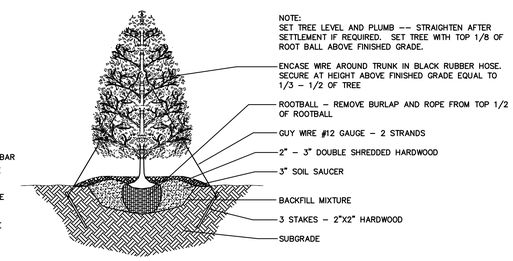

TYPICAL PLANTING DETAIL - EVERGREEN TREES
NOT TO SCALE

GENERAL NOTES

1. ALL LANDSCAPE PLANT MATERIALS SHALL CONFORM TO THE LATEST VERSIONS OF THE AMERICAN STANDARD OF NURSERY STOCK (ANSI Z60.1). PLANT MATERIALS SHALL BE OF STANDARD QUALITY OR BETTER, TRUE TO NAME AND TYPE OF THEIR SPECIES OR VARIETY.
2. LANDSCAPE PLANT MATERIALS SHALL BE PLANTED IN ACCORDANCE TO THE STANDARDIZED LANDSCAPE SPECIFICATIONS ADOPTED BY EITHER THE PENNSYLVANIA NURSERYMAN'S ASSOCIATION, THE VIRGINIA SOCIETY OF LANDSCAPE DESIGNERS, OR THE PENNSYLVANIA CHAPTEROF THE AMERICAN SOCIETY OF LANDSCAPE ARCHITECTS.
3. THE CONTRACTOR SHALL VERIFY THE PLANT SCHEDULE WITH THE SYMBOLS DRAWN ON THE PLAN AND CONTACT THE LANDSCAPE ARCHITECT AT THE SITE PLAN ENGINEER'S OFFICE IF A DISCREPANCY EXISTS. UNLESS DIRECTED OTHERWISE BY THE LANDSCAPE ARCHITECT, THE CONTRACTOR SHALL COMPLY WITH THE QUANTITIES AND LOCATIONS AS DRAWN ON THE LANDSCAPE PLAN.
4. THE CONTRACTOR SHALL COMPLY WITH THE LANDSCAPE SPECIFICATIONS GUIDE LINES ADOPTED BY THE LANDSCAPE CONTRACTORS ASSOCIATION FOR PLANTING BED PREPARATION AND SOIL MIX GUIDE LINES AND PRODUCERS.
5. THE EXISTING UNDERGROUND UTILITIES SHOWN HEREON ARE BASED UPON AVAILABLE INFORMATION. THE CONTRACTOR BE REASONABLE FOR DETERMINING THE EXACT LOCATION OF ALL UTILITIES BEFORE COMMENCING WORK AND FOR ANY DAMAGE WHICH OCCUR BY HIS FAILURE TO LOCATE OR PRESERVE THESE UNDERGROUND UTILITIES.
6. IT SHALL BE THE RESPONSIBILITY OF THE CONTRACTOR TO VERIFY FIELD CONDITIONS PRIOR TO CONSTRUCTION AND TO NOTIFY THE SITE PLAN ENGINEER'S OFFICE IF THE FIELD CONDITIONS ARE NOT IN CONFORMANCE WITH THE APPROVED PLANS.

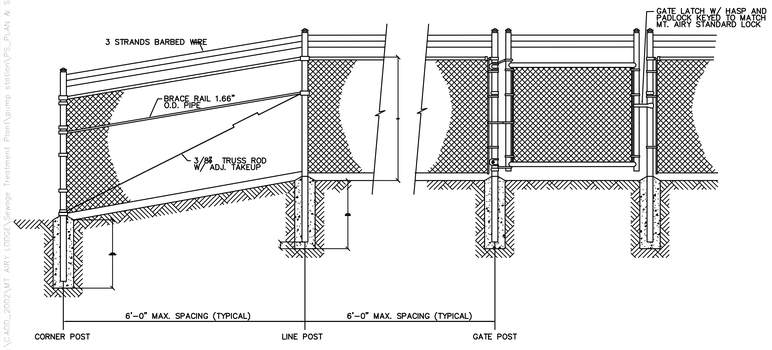

CHAIN LINK FENCE DETAIL
N.T.S.

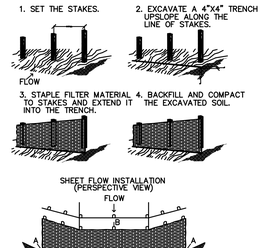

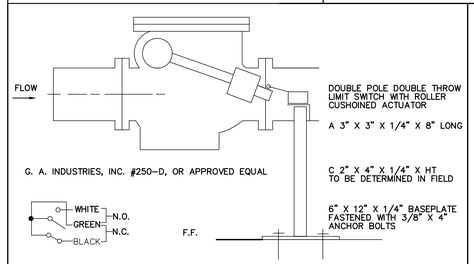

CHECK VALVE LIMIT SWITCH DETAIL
N.T.S.

ALBERT J. MAGNOTTA, JR., P.E.
REGISTRATION # 14267-E

SANITARY SEWAGE SYSTEM - DETAILS

MOUNT AIRY #1 L.L.C.

LAND DEVELOPMENT

PARADISE TOWNSHIP, MONROE COUNTY PENNSYLVANIA

REVISIONS	DATE

DESIGNED	DRAWN
A.J.M.	A.J.M.
CHECKED	SCALE
A.C.B.	N/A
JOB NO.	DATE
05-01-01	08-23-05

consulting engineers
p.o. box 995, scranton, pa. 18501 570-342-3101
ceco associates inc.

SHEET NO. SS-6

Z:\C400_200\MT AIRY LODGE\Sewage Treatment Plant\pump station\PS_PLAN & SECT_SS-6.dwg, 8/19/2009 1:05:36 PM